You can get this game at www.magic-play.eu

420-7353-01UK
1st PRINTING

SEGA®

Sega Amusements Europe Limited.
42 Barwell Business Park, Leatherhead Road, Chessington, Surrey, KT9 2NY. United Kingdom.
Telephone: +44 (0) 208 391 8090 Facsimile: +44 (0) 208 391 8099
email: mailbox@sega.co.uk Web: http://www.segaarcade.com

© SEGA

OPERATION GHOST

OWNER'S MANUAL

420-7353-01UK

SEGA®

OPERATION G.H.O.S.T.™

OWNER'S MANUAL

IMPORTANT

- Before using this product, read this manual carefully to understand the contents herein stated.
- After reading this manual, be sure to keep it near the product or in a convenient place for easy reference when necessary.

You can get this game at www.magic-play.eu

You can get this game at www.magic-play.eu

BEFORE USING THE PRODUCT, BE SURE TO READ THE FOLLOWING:

To maintain safety:

To ensure the safe operation of this product, be sure to read the following before usage.
The following instructions are intended for the users, operators and the personnel in charge of the operation of the product. After carefully reading and sufficiently understanding the warning displays and cautions, handle the product appropriately. Be sure to keep this manual close to the product or in a convenient place for future reference.

Herein, explanations which require special attention are enclosed with dual lines. Depending on the potentially hazardous degrees, the terms of DANGER, WARNING, CAUTION, etc. are used. Be sure to understand the contents of the displays before reading the text.

⚠ DANGER Indicates that mishandling the product by disregarding this pictograph will cause severe injury or death.

⚠ WARNING Indicates that mishandling the product by disregarding this warning will cause a potentially hazardous situation which can result in death or serious injury.

⚠ CAUTION Indicates that mishandling the product by disregarding this caution will cause a slight hazardous situation which can result in personal injury and/or material damage.

For the safe usage of the product, the following pictographs are used:

Indicates "HANDLE WITH CARE." In order to protect the human body and equipment, this display is attached to places where the instruction manual should be referred to.

Indicates a "protective earth terminal." Before operating the equipment, be sure to connect it to the ground.
(The step may be omitted for products in which a power cable with earth is used.)

- **Perform work in accordance with the instructions herein stated.**
  Instructions for work are explained by paying attention to the aspect of accident prevention. Failing to perform work as per the instructions can cause accidents. In the case where only those who have technical expertise should perform the work to avoid hazardous situation, the instructions herein state that the site maintenance personnel should perform such work.
- **Be sure to turn off the power before working on the machine.**
  To prevent an electric shock, be sure to turn off the power and unplug the power cable before carrying out any work that requires direct contact with the interior of the product. If the work is to be performed in the power-on status, the instruction manual herein always states to that effect.
- **Be sure to ground the earth terminal.**
  (This is not required in the case where a power cable with earth is used.)
  This product is equipped with the earth terminal. When installing the product, connect the earth terminal to the "accurately grounded indoor earth terminal" by using an earth wire. Unless the product is grounded appropriately, the user can be subject to an electric shock. After performing repair, etc. for the control equipment, ensure that the earth wire is firmly connected to the control equipment.
- **Ensure that the power supply used is equipped with an earth leakage breaker.**
  Using a power supply which is not equipped with the earth leakage breaker can cause a fire when earth leakage occurs.
- **Be sure to use fuses which meet the specified rating.**
  (Only for the machines which use fuses.)
  Using fuses exceeding the specified rating can cause a fire and an electric shock.

You can get this game at www.magic-play.eu

You can get this game at www.magic-play.eu

- **Specification changes (removal of equipment, conversion and addition) not designated by SEGA are not allowed.**
  The parts of the product include warning labels for safety, covers for personal protection, etc. It is very hazardous to operate the product by removing parts and/or modifying the circuits. Should doors, lids and protective parts be damaged or lost, refrain from operating the product, and contact where the product was purchased from or the office herein stated.
  SEGA shall not be held responsible for any accidents, compensation for damage to a third party, resulting from the specifications not designated by SEGA.
- **Ensure that the product meets the requirements of appropriate electrical specifications.**
  Before installing the product, check for electrical specifications. SEGA products have a nameplate on which electrical specifications are described. Ensure that the product is compatible with the power supply voltage and frequency requirements of the location. Using any electrical specifications different from the designated specifications can cause a fire and an electric shock.
- **Install and operate the product in places where appropriate lighting is available, allowing warning labels to be clearly read.**
  To ensure safety for the customers, labels and printed instructions describing potentially hazardous situations are applied to places where accidents can be caused. Ensure that where the product is operated has sufficient lighting allowing the warnings to be read. If any label is peeled off, apply it again immediately. Please place an order with where the product was purchased from or the office herein stated.
- **When handling the monitor, be very careful.**
  (Applies only to products with monitors.)
  Some of the monitor parts are subject to high tension voltage. Even after turning off the power, some portions are still subject to high tension voltage sometimes. Monitor repair and replacement should be performed only by those technical personnel who have knowledge of electricity and technical expertise.
- **Be sure to adjust the monitor properly.**
  (Applies only to products with monitors.)
  Do not operate the product leaving on-screen flickering or blurring as it is. Using the product with the monitor not properly adjusted may cause dizziness or a headache to an operator, a player, or the customers.
- **When transporting or reselling this product, be sure to attach this manual to the product.**

* *In the case where commercially available monitors and printers are used in this product, only the contents relating to this product are explained herein. Some commercially available equipment has functions and reactions not stated in this manual. Read this manual together with the specific instruction manual of such equipment.*
* *Descriptions herein contained may be subject to improvement changes without notice.*
* *The contents described herein are fully prepared with due care. However, should any question arise or errors be found, please contact SEGA.*

INSPECTIONS IMMEDIATELY AFTER TRANSPORTING THE PRODUCT TO THE LOCATION

Normally, at the time of shipment, SEGA products are in a status allowing for usage immediately after transporting to the location. Nevertheless, an irregular situation may occur during transportation. Before turning on the power, check the following points to ensure that the product has been transported in a satisfactory status.

☐ Are there any dented portions or defects (cuts, etc.) on the external surfaces of the cabinet?
☐ Are casters and adjusters damaged?
☐ Do the power supply voltage and frequency requirements meet with those of the location?
☐ Are all wiring connectors correctly and securely connected? Unless connected in the correct way, connector connections can not be made accurately. Do not insert connectors forcibly.
☐ Do power cables have cuts and dents?
☐ Are all accessories available?
☐ Can all doors and lids be opened with the accessory keys? Can doors and lids be firmly closed?

You can get this game at www.magic-play.eu

You can get this game at www.magic-play.eu

TABLE OF CONTENTS

INTRODUCTION		**vi**
1	**HANDLING PRECAUTIONS**	**1**
2	**PRECAUTIONS REGARDING INSTALLATION**	**4**
3	**PRECAUTIONS REGARDING OPERATION**	**8**
	3-1 BEFORE OPERATION	8
	3-2 PAYING ATTENTION TO CUSTOMERS	10
4	**PART DESCRIPTIONS**	**12**
5	**ACCESSORIES**	**13**
6	**ASSEMBLY AND INSTALLATION**	**14**
	6-1 INSTALLING THE CABINET	15
	6-3 FIXATION TO SITE	23
	6-4 POWER SUPPLY AND OTHER CONNECTIONS	25
	6-5 TURNING ON THE POWER	26
	6-6 CONFIRMATION OF ASSEMBLY	28
	6-7 APPLYING WARNING LABELS (EPILEPTIFORM SEIZURES)	29
7	**PRECAUTIONS WHEN MOVING THE MACHINE**	**30**
	7-1 PRECAUTIONS WHEN MOVING FROM SITE	31
8	**GAME DESCRIPTION**	**32**
	8-1 HOW TO PLAY	32
	8-2 GAME SCREENS	32
	8-3 RELOADING	33
	8-4 SWITCHING SHOOTING MODE	33
	8-5 RTO (REAL TIME TACTICAL ORDER)	34
	8-6 ITEMS	34
	8-7 EVENTS	35
	8-8 BATTLES WITH BOSSES	35
	8-9 GAME OVER	36
	8-10 CONTINUE PLAY BONUS	37

You can get this game at www.magic-play.eu

You can get this game at www.magic-play.eu

9 EXPLANATION OF TEST AND DATA DISPLAY 38

9-1 SWITCH UNIT AND COIN METER. 39
9-2 SYSTEM TEST MODE 40
9-3 GAME TEST MODE 41
9-4 SYSTEM INFORMATION 52
9-5 STORAGE INFORMATION 54
9-6 JVS TEST 55
9-7 MONITOR TEST 58
9-8 SPEAKER TEST 59
9-9 COIN ASSIGNMENTS 60
9-10 CLOCK SETTINGS 64
9-11 NETWORK TEST 66
9-12 EXIT 68

10 CONTROLLER UNIT(S) 69

10-1 REMOVING THE CONTROLLER UITS 71
10-2 REMOVING THE CONTROLLER SUPPORT 73
10-3 REMOVING THE SCOPE 74
10-4 REMOVING THE MICROSWITCH 76
10-5 REPLACING THE SOLENOID 78

11 GRAPHICS DISPLAY 80

11-1 PRECAUTIONS WHEN HANDLING THE LCD DISPLAY 80

12 COIN HANDLING 86

12-1 CLEANING THE COIN SELECTOR 86
12-2 FAULT FINDING 89
12-3 ADJUSTING THE PRICE OF PLAY (EXCEL) 90
12-4 ADJUSTING THE PRICE OF PLAY (VTS) 91
12-5 NRI OPTIONS - STERLING / EURO SELECT 95
12-6 NRI OPTIONS - TEACH AND RUN PROGRAMMING 96

13 LAMPS AND LIGHTING 97

13-1 COIN DOOR LAMP 97
13-2 START BUTTON LAMP REPLACEMENT 98
13-3 SIDE LED REPLACEMENT 99
13-4 UPPER LED REPLACEMENT 101
13-5 LOWER LED REPLACEMENT 103
13-6 UPPER MASK ASSY REMOVAL 105
13-7 LOWER MASK ASSY REMOVAL 107

14 PERIODIC INSPECTION 109

15 TROUBLESHOOTING 111

15-1 TROUBLESHOOTING (WHEN NO ERROR MESSAGE IS SHOWN) 111

You can get this game at www.magic-play.eu

You can get this game at www.magic-play.eu

16 GAME BOARD (RINGWIDE) 113

16-1 HANDLING PRECAUTIONS 114
16-2 PARTS DETAILS 115
16-3 RINGWIDE COMPONENTS 119
16-4 ERROR CODES DISPLAY 120
16-5 REPLACING THE BUTTON BATTERY 131
16-6 CLEANING RINGWIDE 133
16-7 GAME BOARD (RINGWIDE) LOCATION AND REMOVAL 135

17 FUSES AND FUSE REPLACEMENT 138

17-1 CONTROLLER AND LED FUSE REPLACEMENT 138
17-2 MAIN FUSE REPLACEMENT 140
17-3 AC DISTRIBUTION FUSE BD 141

18 DESIGN-RELATED PARTS 142

19 PARTS LIST 143

20 WIRE COLOUR CODE TABLE 171

21 SCHEMATIC DIAGRAMS 172

You can get this game at www.magic-play.eu

You can get this game at www.magic-play.eu

INTRODUCTION

This manual is intended to provide detailed descriptions together with all necessary information covering the general operation of electronic assemblies, electromechanical, servicing control, spare parts, etc. for the product, "OPERATION GHOST"

This manual is intended for the owners, personnel managers in charge of operation of this product.
Operate the product after carefully reading and sufficiently understanding the instructions.

In the unlikely event that the product does not function correctly, DO NOT allow anyone other than a technician to touch the internal system. Turn off the power to the machine, making sure to unplug the electrical cord from the outlet, and contact the office listed below or the point-of-purchase for this product.

Use of this product is unlikely to cause physical injuries or damage to property. However, points that require special attention are indicated by bold text, the words "STOP, IMPORTANT or CAUTION" and the symbols below.

STOP IMPORTANT

Indicates important information that, if ignored, may result in the mishandling of the product and cause faulty operation or damage to the product.

⚠ WARNING ⚠ CAUTION

Indicates a warning or caution that, if ignored, may result in the mishandling of the product and cause faulty operation or damage to the product.

Sega Amusements Europe Limited.

42 Barwell Business Park, Leatherhead Road, Chessington, Surrey, KT9 2NY. United Kingdom.

European Sales:	+44 (0) 208 391 8090	Facsimile:	+44 (0) 208 391 8099
USA Sales:	+00 (1) 224 265 4287		
STS (Spares):	+44 (0) 208 391 8060	Facsimile:	+44 (0) 208 391 8096
email:	mailbox@sega.co.uk	Web:	http://www.segaarcade.com

SPECIFICATIONS

Standard Cabinet	
Machine Dimensions (Normal):	1,57m (43.7in.) [Width] x 1,09m (42.9in.) [Depth]
Machine Dimensions (Extended)	1,57m (43.7in.) [Width] x 1,51m (59.4in) [Depth]
Machine Height:	2.1m (86.6in.) (Installed)
Machine Weight:	190kg Approx (Installed)
Power, maximum current:	-408w-
Rating:	1.7A @ 240vac 3.4A @ 120vac

You can get this game at www.magic-play.eu

You can get this game at www.magic-play.eu

Definition of 'Site Maintenence Personnel or Other Qualified Individuals

STOP IMPORTANT

Procedures not described in this manual or marked as 'to be carried out by site maintenance personnel or other qualified professionals' should not be carried out by personnel without the necessary skill or technology. Work carried out by unqualified persons may cause serious accidents, including electrocution.

Parts replacement, maintenance inspections and troubleshooting should be carried out by site maintenance personnel or other qualified professionals. This manual includes directions for potentially dangerous procedures which should only be carried out by professionals with the appropriate specialised knowledge.

The site maintenance personnel or other qualified professionals mentioned in this manual are defined as follows:

Site maintenance personnel:
Individuals with experience in maintaining amusement equipment, vending machines, etc., working under the supervision of the owner/operator of this product to maintain machines within amusement facilities or similar premises by carrying out everyday procedures such as assembly, maintenance inspections, and replacement of units/expendable parts.

Activities to be carried out by site maintenance personnel:
Amusement equipment/vending machine assembly, maintenance inspection and replacement of units/expendable parts.

Other qualified professionals:
Persons employed by amusement equipment manufacturers, or involved in design, production, testing or maintenance of amusement equipment. The individual should have either graduated from technical school or hold similar qualifications in electrical/electronics/mechanical engineering.

Activities to be carried out by other qualified professionals:
Amusement equipment/vending machine assembly, repair/adjustment of electrical/electronic/mechanical parts.

You can get this game at www.magic-play.eu

You can get this game at www.magic-play.eu

Waste of Electrical and Electronic Equipment (WEEE) Statement.

The WEEE (Waste of Electrical and Electronic Equipment) directive places an obligation on all EU based manufacturers and importers of Electrical and Electronic Equipment to take back products at the end of their useful life. Sega Amusements Europe Ltd accepts its responsibility to finance the cost of treatment and recovery of redundant WEEE in the United Kingdom in accordance with the specified WEEE recycling requirements.

The symbol shown below will be on all products manufactured from 13th August 2005, which indicates this product must NOT be disposed of with other normal waste. Instead, it is the user's responsibility to dispose of their waste equipment by arranging to return it to a designated UK collection point for the correct recycling of waste electrical and electronic equipment.

For more information about where you can send your waste equipment for recycling contact your local authority office.

For non-UK users contact your local authority office for information on the recycling of Waste Electrical and Electronic Equipment.

Battery Recycling Statement.

The EC Directive on Batteries and Accumulators (2006/66/EC) aims to minimise the impact of batteries on the environment and encourage the recovery of the materials they contain. To achieve increased collection and recycling of waste batteries, the Directive places 'producer responsibility' obligations on manufacturers and importers of portable, industrial and automotive batteries.

The symbol shown below will be on all equipment fitted with batteries from 26th September 2008 and indicates they must NOT be disposed of with other normal waste. Instead, it is the user's responsibility to dispose of used batteries by arranging to return them to a designated collection point for the correct recycling.

For more information about where you can send your waste batteries for recycling contact your local authority office.

REGISTERED IN ENGLAND REGISTERED NO. 1711515

REGISTERED OFFICE: BLOCK C 42 BARWELL BUSINESS PARK, CHESSINGTON, SURREY KT9 2NY

You can get this game at www.magic-play.eu

You can get this game at www.magic-play.eu

1 HANDLING PRECAUTIONS

When installing or inspecting the machine, be very careful of the following points and pay attention to ensure that the player can enjoy the game safely.
Noncompliance with the following points or inappropriate handling running counter to the cautionary matters herein stated can cause personal injury or damage to the machine.

⚠ WARNING

- **Before performing work, be sure to turn the power off. Performing the work without turning the power off can cause an electric shock or short circuit. In cases where work should be performed in the status of power on, this manual always states to that effect.**
- **To avoid an electric shock or short circuit, do not plug in or unplug quickly.**
- **To avoid an electric shock, do not plug in or unplug with a wet hand.**
- **Do not expose power cords or earth wires on the surface, (floor, passage, etc.) If exposed, the power cords and earth wires are susceptible to damage. Damaged cords and wires can cause an electric shock or short circuit.**
- **To avoid causing a fire or an electric shock, do not put things on or damage the power cords.**
- **When or after installing the product, do not unnecessarily pull the power cord. If damaged, the power cord can cause a fire or an electric shock.**
- **In case the power cord is damaged, ask for a replacement through where the product was purchased from or the office herein stated. Using the cord as is damaged can cause fire, an electric shock or leakage.**
- **Be sure to perform grounding appropriately. Inappropriate grounding can cause an electric shock.**
- **Be sure to use fuses meeting the specified rating. Using fuses exceeding the specified rating can cause a fire or an electric shock.**
- **Be sure that connections such as IC BD are made properly. Insufficient insertion can cause an electric shock.**
- **Specification changes, removal of equipment, conversion and/or addition, not designated by SEGA are not permitted.**
- **Failure to observe this may cause a fire or an electric shock. Noncompliance with this instruction can have a bad influence upon physical conditions of the players or the onlookers, or result in injury during play.**
- **SEGA shall not be held responsible for damage, compensation for damage to a third party, caused by specification changes not designated by SEGA.**
- **Do not perform any work or change parts not listed in this manual. Doing so may lead to an accident.**
- **If you need to perform any work not listed in this manual, request work from the office indicated in this manual or the point of purchase, or inquires for details. Be sure to perform periodic maintenance inspections herein stated.**

You can get this game at www.magic-play.eu

You can get this game at www.magic-play.eu

⚠ WARNING

- Do not touch undesignated places. Touching places not designated can cause electric shock or short circuit.
- Whenever any fasteners (e.g. screws, nuts) have been lost, be sure to use replacement fasteners with proper dimensions as specified in this manual. If fasteners of any other dimensions are used, it could cause damage and/or separation of parts that result in secondary accidents.
- Specification changes, removal of equipment, conversion and/or addition, not designated by SEGA are not permitted.
- Failure to observe this may cause a fire or an electric shock. Noncompliance with this instruction can have a bad influence upon physical conditions of the players or the onlookers, or result in injury during play.
- SEGA shall not be held responsible for damage, compensation for damage to a third party, caused by specification changes not designated by SEGA.
- Performing work or parts replacements not described in this manual could result in accidents. If you need to perform any work not listed in this manual, request work from the office indicated in this manual or the point-of-purchase, or inquires for details.
- Be sure to perform periodic maintenance inspections herein stated.

STOP IMPORTANT

- For the IC board circuit inspections, only the use of a logic tester is recommended. Using a Multi- Tester or General Purpose Tester may result in damage to IC Circuits.
- Static electricity from your body may damage some electronics devices on the IC board. Before handling the IC board, touch a grounded metallic surface so that the static electricity can be discharged.
- This video gaming cabinet utilises a motorised steering feedback system. Do not attempt to service this part or any other part in close proximity to the steering mechanism whilst power is applied.
- Some parts are not designed and manufactured specifically for this game machine. The manufacturers may discontinue, or change the specifications of such general-purpose parts. If this is the case, SEGA cannot repair or replace a failed game machine whether or not a warranty period has expired.

You can get this game at www.magic-play.eu

You can get this game at www.magic-play.eu

CONCERNING THE STICKER DISPLAY

This SEGA product has stickers attached describing the product manufacture No. (Serial No.) and Electrical Specifications. It also has a Sticker describing where to contact for repair and for purchasing parts.
When inquiring about or asking for repairs, mention the Serial No. and Name of Machine indicated on the Sticker. The Serial Number indicates the product register. Identical machines could have different parts depending on the date of production. Also, improvements and modifications might have been made after the publication of this manual. In order to ensure you order the correct parts, mention the Serial No. when contacting the applicable places.

CONCERNING WARNING DISPLAYS

This SEGA product has warning displays on stickers, labels and/or printed instructions adhered/attached to or incorporated in the places where a potentially hazardous situation could arise. The warning displays are intended for accident prevention for customers and for avoiding hazardous situations relating to maintenance and servicing work. Some portions of the cabinet contain high voltage and may cause accidents if touched. When performing maintenance, be very careful of the warning displays. It is especially important that any complex repair and replacement work not mentioned herein should be performed by those technical personnel who have knowledge of electricity and technical expertise.
In order to prevent accidents, caution any customer ignoring the warnings to cease and desist immediately.

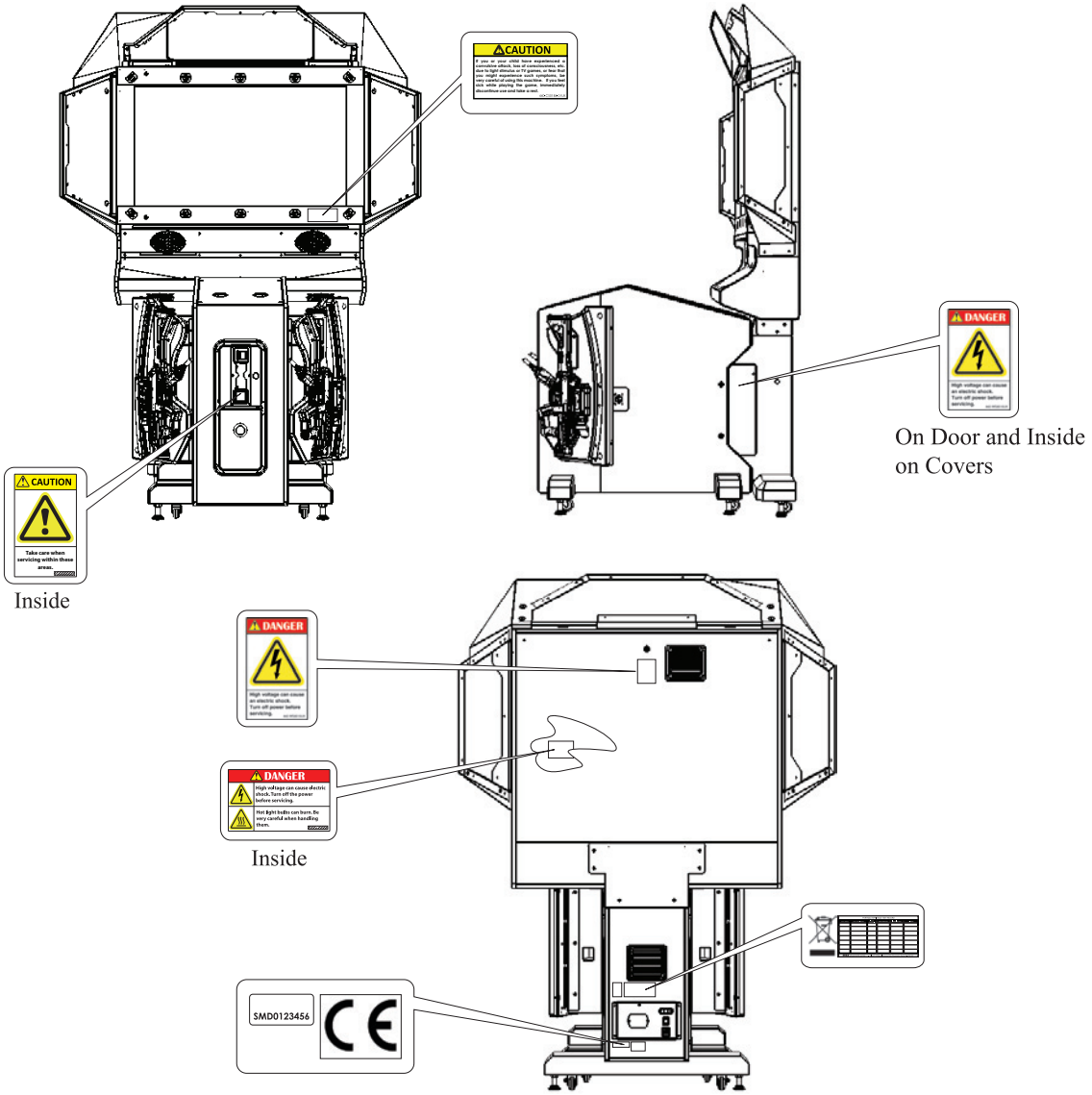

You can get this game at www.magic-play.eu

You can get this game at www.magic-play.eu

2 PRECAUTIONS REGARDING INSTALLATION

⚠ WARNING

- This product is an indoor game machine. Do not install it outside. Even indoors, avoid installing in places mentioned below so as not to cause a fire, electric shock, injury and/or malfunction.
- Places subject to rain or water leakage, or places subject to high humidity in the proximity of an indoor swimming pool and/or shower, etc.
- Places subject to direct sunlight, or places subject to high temperatures in the proximity of heating units, etc.
- Places filled with inflammable gas or vicinity of highly inflammable/volatile chemicals or hazardous matter.
- Dusty places.
- Sloped surfaces.
- Places subject to any type of violent impact.
- Vicinity of anti-disaster facilities such as fire exits and fire extinguishers.
- Areas where the temperature exceeds the applicable temperature (ambient temperature) range of 5 to 30 degrees centigrade.

LIMITATIONS OF USAGE

⚠ WARNING

- Be sure to check the Electrical Specifications. Ensure that this product is compatible with the location's power supply, voltage, and frequency requirements. A plate describing Electrical Specifications is attached to the product. Noncompliance with the Electrical Specifications can cause a fire and electric shock.
- This product requires a breaker and earth mechanism as part of the location facilities. Using the product without these can cause a fire and electric shock.
- Ensure that the indoor wiring for the power supply is rated at 15 A or higher (AC single phase 100 V ~ 120 V area), and 7 A or higher (AC 220 V ~ 240 V area). Noncompliance with the Electrical Specifications can cause a fire and electric shock.
- Be sure to use an independent power supply equipped with an earth leakage breaker. Using a power supply without an earth leakage breaker can cause an outbreak of fire if a power surge occurs.
- Putting many loads on one electrical outlet can cause generation of heat and a fire resulting from overload.
- When using an extension cord, ensure that the cord is rated at 15 A or higher (AC 100 V ~ 120 V area) and 7 A or higher (AC 220 V ~ 240 V area). Using a cord rated lower than the specified rating can cause a fire and electric shock.

You can get this game at www.magic-play.eu

You can get this game at www.magic-play.eu

IMPORTANT

Securing a safe area for operation as described in this manual will ensure safe operation for players and observers.

SEGA shall not be held responsible for damage or compensation for damage to a third party, resulting from the failure to observe this instruction.

OPERATION AREA (SINGLE CABINET)

⚠ WARNING

- **For safe operation, use and operate this product in an area measuring at least 2.07 m (81.4 in) in width and 1.89 m (74.4 in) in depth when the cabinet is installed in a compressed format and 2.07 m (81.4 in) in width and 2.31 m (91 in) in depth for the extended format of this cabinet. SEGA shall not be held responsible for damage or compensation for damage to a third party, resulting from the failure to observe this instruction.**
- **The ceiling where this product is installed must be at least 2.17 m (85.4 in) high. If the ceiling is too low, the heat emitted from the product may cause it to catch on fire.**
- **Be sure to provide sufficient space specified in this manual. Do not allow objects to block the ventilation ports. It can cause generation of heat and a fire.**
- **Put the cabinets close together so that people cannot get through or provide enough space between them that people can go both ways without difficulty. If the cabinets are installed carelessly, people may bump into each other or the cabinets when passing between them or fall down. To prevent people from walking between them, place them 0.15 m (59 in) apart.**
- **If the machine does not fit through the entryway to the installation location, do not disassemble it without first consulting the instructions. Specific tools and adjustment procedures are required to assemble and disassemble the mechanical parts. Attempting to assemble or disassemble the machine without consulting the instructions may result in accidents during assembly/ disassembly and electric shock, short circuits, and/or personal injury during operation. If the machine still does not fit through the entryway after following the procedures in this manual, contact your retailer or the office listed in this manual.**
- **If the machine is still too large to fit through the entryway after following the procedures listed in this manual, do not tip the machine on its side. Attempting to transport the machine while it is tipped on its side may cause accidents. It may also damage or warp parts of the machine, resulting in accidents during operation.**
- **To install this product, the entrance must be at least 0.8 m (31.5 in) in width and 1.89 m (74.4 in) in height. If the entrance is too narrow, do not tilt the product carelessly. If all the product weight is put on the casters at one side only, there could be damage or deformation, causing serious accidents such as workers getting caught underneath.**

You can get this game at www.magic-play.eu

You can get this game at www.magic-play.eu

STOP IMPORTANT

To install this product, the entrance must be at least 1.1m in width and 1.7 m in height (without Assy Billboard) and 2.21m (with Assy Billboard).

Do not attempt to push/pull whilst holding onto the Assy Billboard. This may result in part damage and or personal injury.

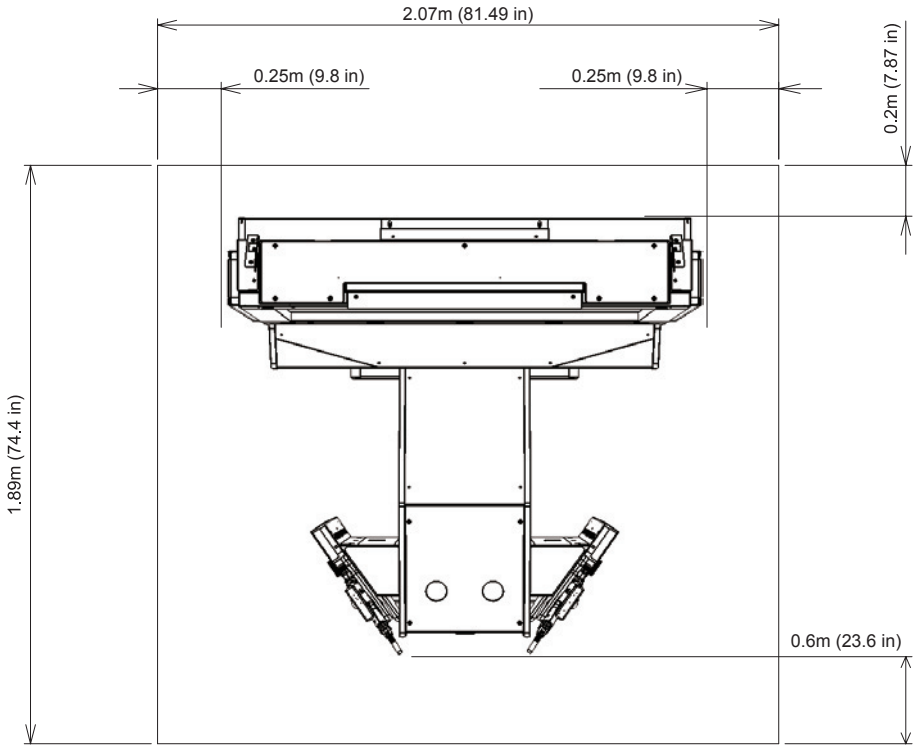

Compressed cabinet

You can get this game at www.magic-play.eu

You can get this game at www.magic-play.eu

STOP IMPORTANT

To install this product, the entrance must be at least 1.1m in width and 1.7 m in height (without Assy Billboard) and 2.21m (with Assy Billboard).

Do not attempt to push/pull whilst holding onto the Assy Billboard. This may result in part damage and or personal injury.

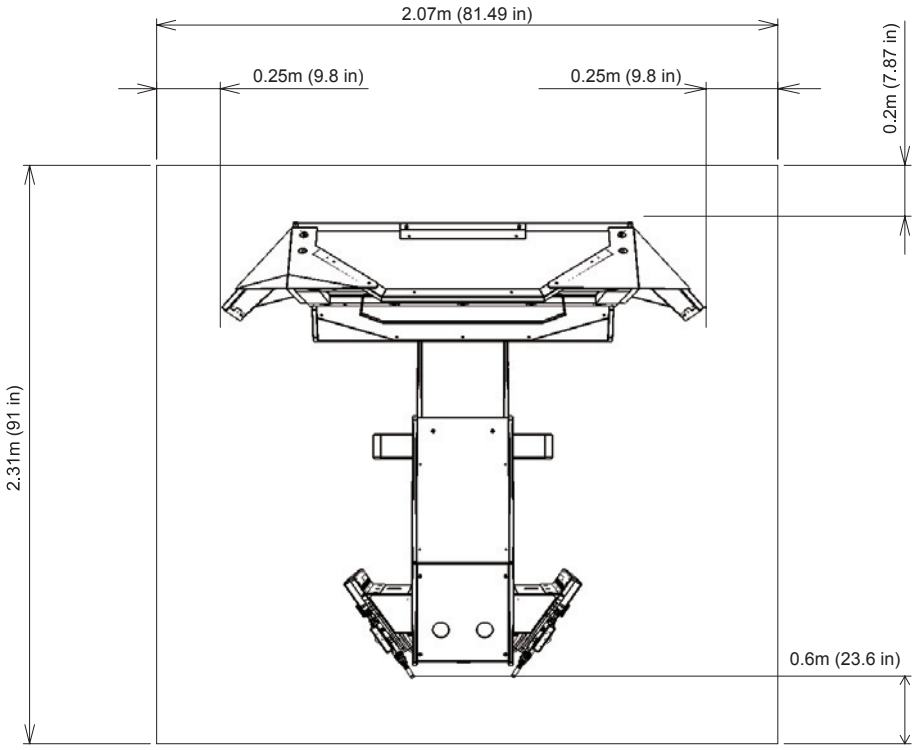

Extended cabinet

You can get this game at www.magic-play.eu

You can get this game at www.magic-play.eu

3 PRECAUTIONS REGARDING OPERATION

To avoid injury and trouble, be sure to pay attention to the behaviour of visitors and players.

3-1 BEFORE OPERATION

⚠ WARNING

- **In order to avoid accidents, check the following before starting the operation:**
- **To ensure maximum safety for the players and the customers, ensure that where the product is operated has sufficient lighting to allow any warnings to be read. Operation under insufficient lighting can cause bodily contact with each other, hitting accident, and/or trouble between customers.**
- **Be sure to perform appropriate adjustment of the display (LCD, Plasma, CRT or Projector). For operation of this machine, do not leave monitor's flickering or deviation as is. Failure to observe this can have a bad influence upon the players' or the customers' physical conditions.**

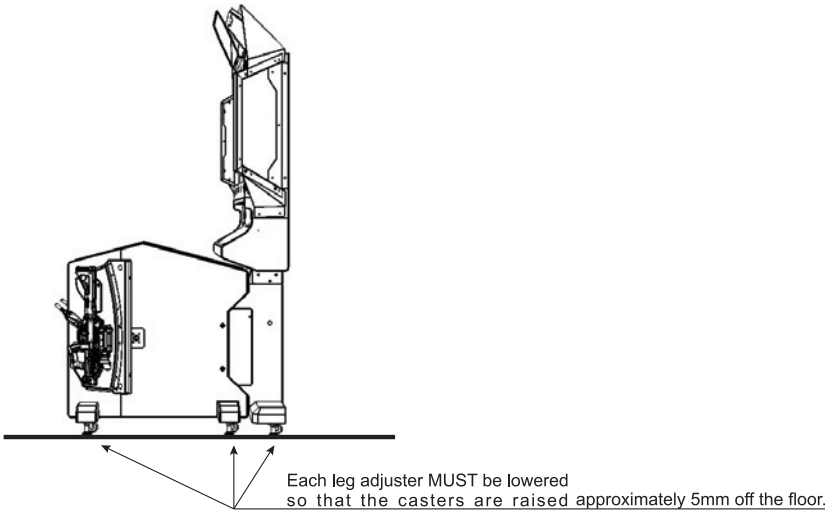

- **It is suggested to ensure a space allowing the players who feel sick while playing the game to take a rest.**
- **Check if all of the adjusters are in contact with the surface. If they are not, the Cabinet can move and cause an accident.**
- **Do not put any heavy item on this product. Placing any heavy item on the product can cause a falling down accident or parts damage.**
- **Do not climb on the product. Climbing on the product can cause falling down accidents. To check the top portion of the product, use a step/stepladder.**
- **To avoid electric shock, check to see if door and cover parts are damaged or omitted.**
- **Do not place the following items on top of the product, nearby the product or hang them from the ceiling. Doing so could result in electric shock, short circuits and/or damage to the parts.**
- **Flower vases, flowerpots, cups, water tanks, cosmetics, and receptacles/ containers/vessels containing chemicals and water.**

You can get this game at www.magic-play.eu

You can get this game at www.magic-play.eu

⚠ CAUTION

- **To avoid injury, be sure to provide sufficient space by considering the potentially crowded situation at the installation location. Insufficient installation space can cause contact, collisions, and/or trouble between customers.**
- **During daily cleaning, be sure to check the surface of the control unit and other parts that the player touches with his/her hands for damage, cracks, or loose screws. If a player uses the machine while it is damaged, cracked, or has a loose screw, the player may become injured.**

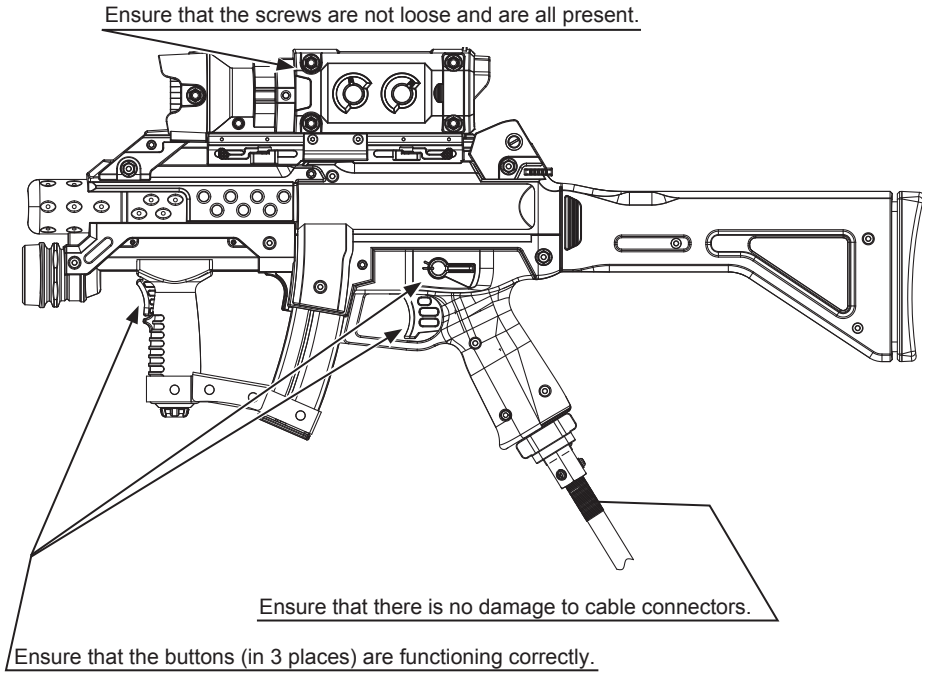

- **Check carefully to make sure there are no gaps in the cabinet joints and that they are not loose. If there are gaps or looseness, players may get their hands or fingers caught, resulting in an injury.**
- **Make sure all the doors are locked securely and that they do not rattle. If the doors are not locked properly or there are gaps or rattling, the players could get their fingers or hands caught. It could also invite mischief.**
- **Be sure to perform appropriate adjustment of the LCD. For operation of this machine, do not leave monitor's flickering or deviation as is. Failure to observe this can have a bad influence upon the players' or the customers' physical conditions.**
- **Inspect for the following items during a trial run. If there is any type of error, use the Test Mode, etc., to resolve the problem. If you continue use with an error, it can cause an accident or irreparable parts damage.**

- **Is there any strangeness in the operability of the control unit?**
- **Is there any improper adjustment of the LCD screen?**

- **Prepare a place where players can rest if they feel sick.**

You can get this game at www.magic-play.eu

You can get this game at www.magic-play.eu

3-2 PAYING ATTENTION TO CUSTOMERS

To avoid injury and trouble, be sure to constantly give careful attention to the behaviour and manner of the visitors and players.

DURING OPERATION (PAYING ATTENTION TO CUSTOMERS)

⚠ WARNING

- **For safety reasons, do not allow any of the following people to play the game.**
- **Those who have high blood pressure or a heart problem.**
- **Those who have experienced muscle convulsion or loss of consciousness when playing video games, etc.**
- **Those who have neck or spinal cord problems.**
- **Those who are intoxicated or under the influence of drugs.**
- **Pregnant women.**
- **Those who are not in good health.**
- **Those who do not follow the attendant's instructions.**
- **Those who cannot grasp the Control Unit securely because of immobility in fingers, hands or arms.**
- **Persons who disregard the product's warning displays.**

This product is intended for a single player only. Having two or more persons simultaneously playing this product can result to injury to the player and possible damage to the product.

- **Even players who have never been adversely affected by light stimulus might experience dizziness or headache depending on their physical condition when playing the game.**

Small children are especially likely to experience these symptoms. Caution guardians of small children to keep watch on their children during play.

- **Instruct those who feel sick during play to have a medical examination.**
- **To avoid injury from falls and electric shocks due to spilled drinks, instruct the player not to place heavy items or drinks on the product.**
- **To avoid electric shocks and short circuits, do not allow customers to put hands and fingers or extraneous matter in the openings of the product or small openings in or around the doors.**
- **To avoid falls and resulting injury, immediately stop the customer from leaning against or climbing on the product, etc.**
- **To avoid electric shock and short circuit, do not allow customers to unplug the power plug without a justifiable reason.**
- **Instruct the guardians of small children to keep an eye on their children.**

Children cannot sense danger. Allowing small children to get near a player who is playing the game could result in the children being bumped, struck or knocked down.

You can get this game at www.magic-play.eu

You can get this game at www.magic-play.eu

STOP IMPORTANT

- Players directly hold the control unit with their bare hands so it is recommended that wet towels (paper towels) be provided.
- Diligently clean the parts that players touch directly to ensure a pleasant game playing experience.
- Inspect the coin insertion slots to make sure no foreign objects have been inserted and that they have not otherwise been tampered with. This will prevent play.

⚠ CAUTION

- Immediately stop such violent acts as hitting and kicking the product. Such violent acts can cause parts damage or falling down, resulting in injury due to fragments and falling down.
- Persons other than the player should not be allowed to touch the controls during play. They may brush against or collide with the controls or the player, possibly resulting in accidents.
- Instruct those who feel sick during play to have a medical examination.
- Immediately stop users from leaning or sitting on the control panel. Such acts can lead to injury or damage to parts or the shape of the cabinet.
- Immediately stop users from swinging or reloading the control unit in a violent manner. Such acts may hurt the user or other people around them.
- Playing too close to the cabinet may cause the control unit to hit the cabinet and cause damage. Make sure that players understand to play at a safe distance from the cabinet.
- Make sure that players understand not to stand too close together when playing a 2 player game. Swinging the control unit could lead to a player getting hit and may cause injury.
- Instruct players to hold the control unit securely while playing. If the control unit is dropped, it could cause injury to the player.
- Items such as large finger rings can cause injury to the fingers while playing. Instruct players to remove all accessories that could cause an accident before playing.
- Instruct players that a single control unit is never to be held by 2 or more people during play. Otherwise there could be dangerous contact or a collision.

STOP IMPORTANT

The control units for use on 1P side (left side) and 2P side (right side) are different. Ensure that players do not confuse the right and left side control units when starting play.

You can get this game at www.magic-play.eu

You can get this game at www.magic-play.eu

4 PART DESCRIPTIONS

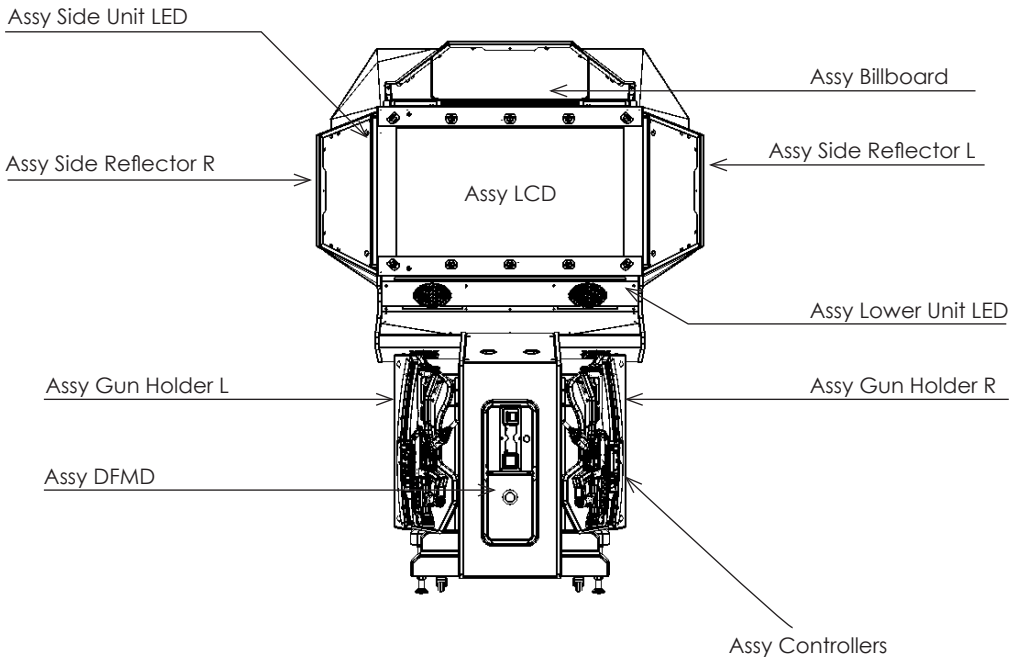

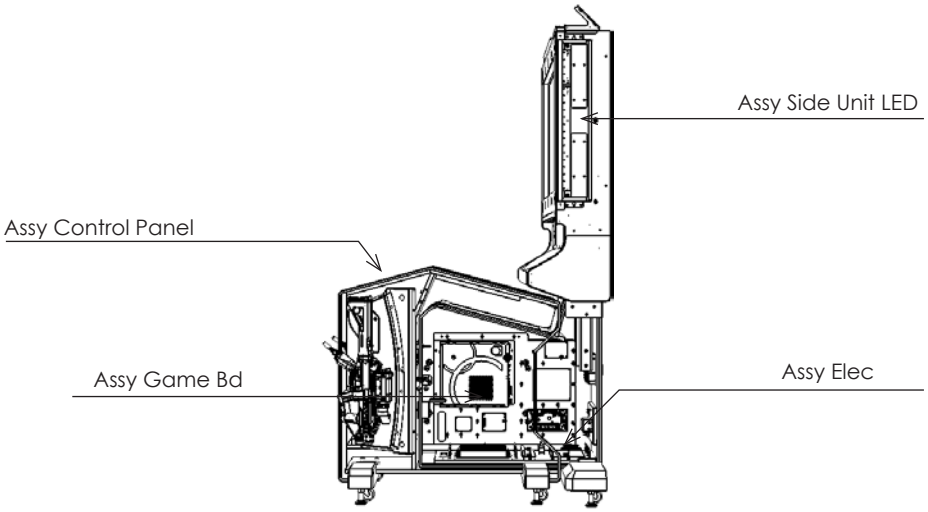

You can get this game at www.magic-play.eu

You can get this game at www.magic-play.eu

5 ACCESSORIES

Confirm that the accessories listed in the table below are present when setting up the product.
Accessories marked “Spare” in the note column are consumable items but included as spares.

Part name / number	Diagram	Quantity
Owners Manual (Pt No 420-7351-01UK)	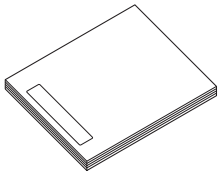	1
Master key	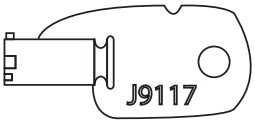	6
Security Key	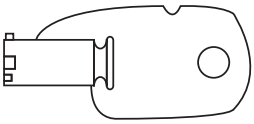	2
DVD Soft Kit (Pt No 610-0816-0037)	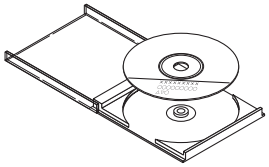	1
Power Lead UK (Pt No LM1227) EU (Pt No LM1246) US (Pt No LM12XX)	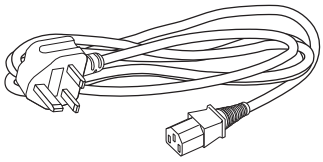	1ea
Spare Fuse (Fitted to ASSY AC UNIT)	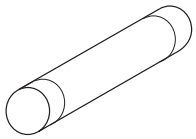	1
Epilepsy Warning Labels (multilingual)		1

You can get this game at www.magic-play.eu

You can get this game at www.magic-play.eu

6 ASSEMBLY AND INSTALLATION

⚠ WARNING

- Perform assembly work by following the procedure herein stated. Failure to comply with the instructions can cause electric shock.
- Perform assembly as per this manual. Since this is a complex machine, incorrect assembling can cause an electric shock, machine damage and/or improper functioning as per specified performance.
- When assembling, more than one person is required. Depending on the assembly work, there are some cases in which working by one person alone can cause personal injury or parts damage.
- Ensure that connectors are properly connected. Improper connections can cause electric shock.
- Be careful not to damage the wires. Damaged wires may cause electric shock or short circuit or present a risk of fire.
- Do not unnecessarily push the display screen.
- This work should be carried out by site maintenance personnel or other qualified professionals. Work performed by nontechnical personnel can cause a severe accident such as electric shock. Failing to comply with this instruction can cause a severe accident such as electric shock to the player during operation. If no one with proper technological expertise is available, request service from the office indicated in this document or the point of purchase so as to ensure safety.
- Provide sufficient space so that assembling can be performed. Performing work in places with narrow space or low ceiling may cause an accident and assembly work to be difficult.
- To perform work safely and avoid serious accident such as the cabinet falling down, do not perform work in places where step-like grade differences, a ditch, or slope exist.
- This product does not use any connectors other than those connected to and used by the game board when it leaves the factory. Do not needlessly connect wires to unused connectors. This could lead to overheating, generation of smoke and burn related injuries.
- Proceed with checks and tasks as indicated in these instructions. If instructions are not followed, or if tasks and/or checks are neglected, an electric shock or other very serious accident, even fatal accident can occur.
- Do not leave any cables exposed in foot traffic areas. These include power cables, earths or network cables as they all present a trip hazard if left uncovered.
- Exercise proper caution when using a step ladder or stool to perform work. Try to carry out risk assessment before proceeding with the work detailed herein. Only carry out work detailed in this manual if it is safe to do so.

You can get this game at www.magic-play.eu

You can get this game at www.magic-play.eu

6-1 INSTALLING THE CABINET

⚠ CAUTION

- **Billboard weighs approximately 15 kg. Have at least 2 people during this operation. Working alone could result in personal injuries, etc.**
- **To perform work safely and securely, be sure to prepare a step which is in a safe and stable condition. Performing work without using a step may lead to injury of damage to components.**

Tools required for installation

Wrench (M6)

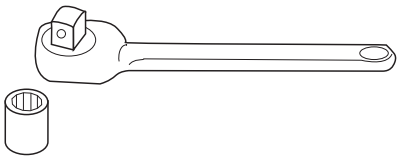

Wrench (M8)

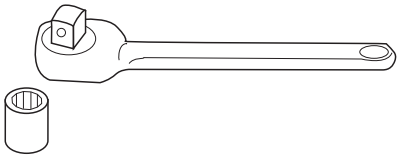

Adjustable wench

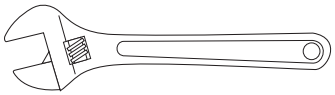

Screwdriver Ph No1

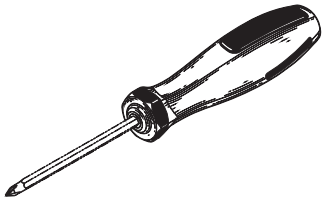

Ladder or step

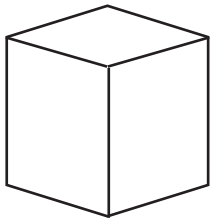

Key

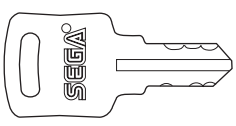

You can get this game at www.magic-play.eu

You can get this game at www.magic-play.eu

6-1-1 INSTALLING THE ASSY REFLECTOR L & R

⚠ CAUTION

- **The Side Reflectors weigh approx 5kg and the Upper Reflector approx 10kg. Have at least 2 people during this operation. Working alone could result in personal injuries, etc.**
- **To perform work safely and securely, be sure to prepare a step which is in a safe and stable condition. Performing work without using a step may lead to injury of damage to components.**

1 Remove the 2x M6x20 Hex Bolt Black from the side of the cabinet where the Reflector Assemblies are to be fitted.

Have another person offer the Assy Reflector L up to the cabinet and secure using the M6 Hex Bolts removed earlier.

Carry out the same procedure for the Right Hand Side.

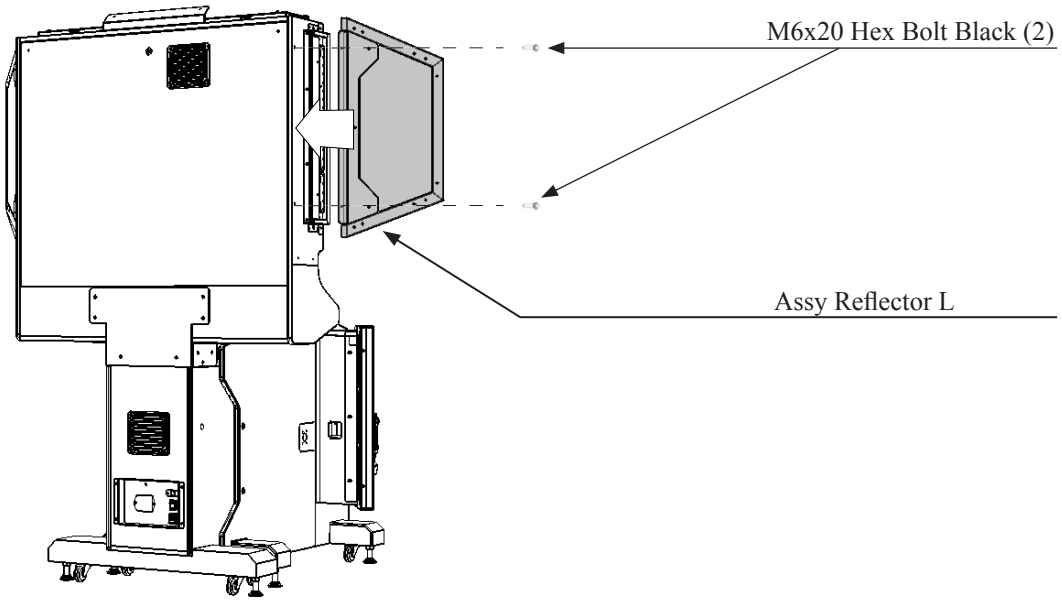

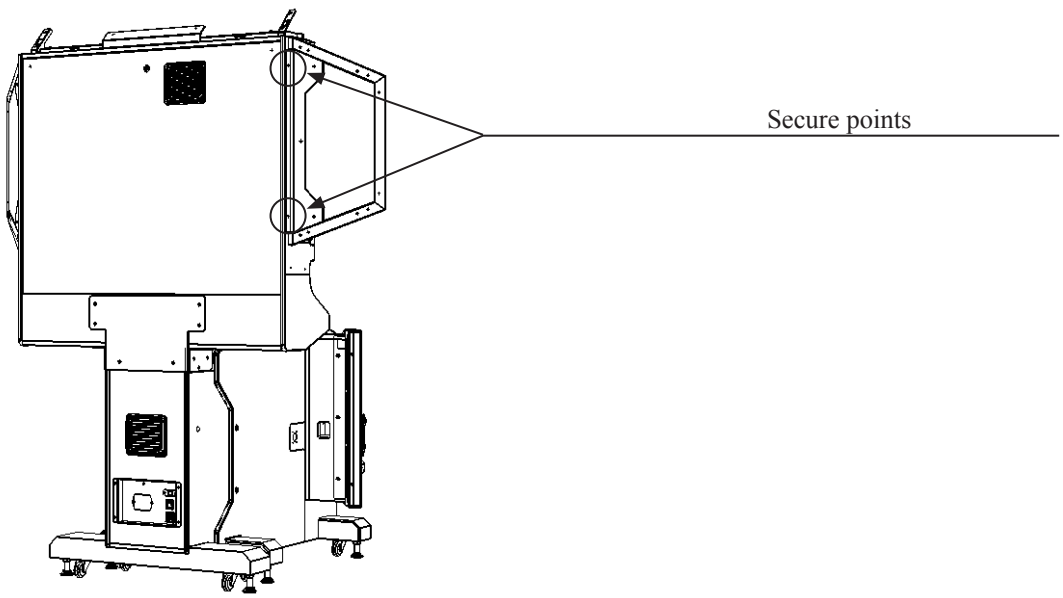

You can get this game at www.magic-play.eu

You can get this game at www.magic-play.eu

2 Fit and secure the BKT LOWER L to the underside of the REFLECTOR L using M4x16 M SCR TH BLK (4) supplied. Repeat the process for the Right Hand Side.

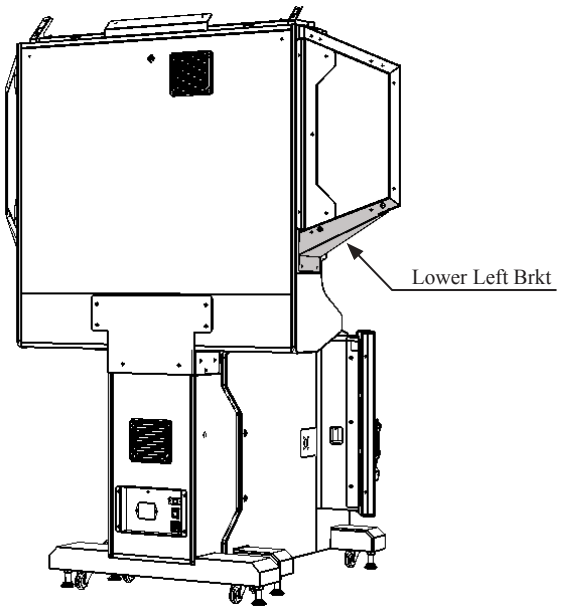

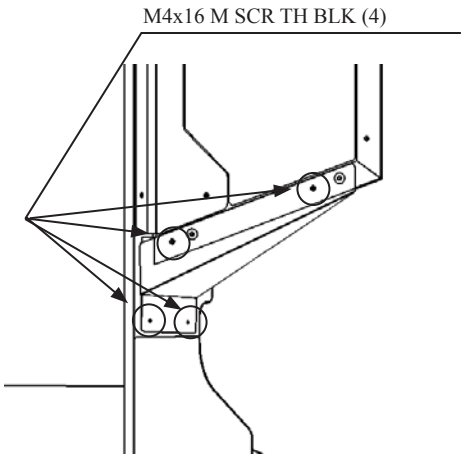

Note:

Please carry out this same operation for both Left and Right sides.

You can get this game at www.magic-play.eu

You can get this game at www.magic-play.eu

6-1-2 INSTALLING THE BILLBOARD HEADER

⚠ CAUTION

- **To perform work safely and securely, be sure to prepare a step which is in a safe and stable condition. Performing work without using a step may lead to injury of damage to components.**

1 Fit and secure the Billboard to the top of the Display Cabinet in the position shown using M5x12 M SCR PAN PAS (2). The fixings are already placed within the locations and will need to be removed prior fitting.

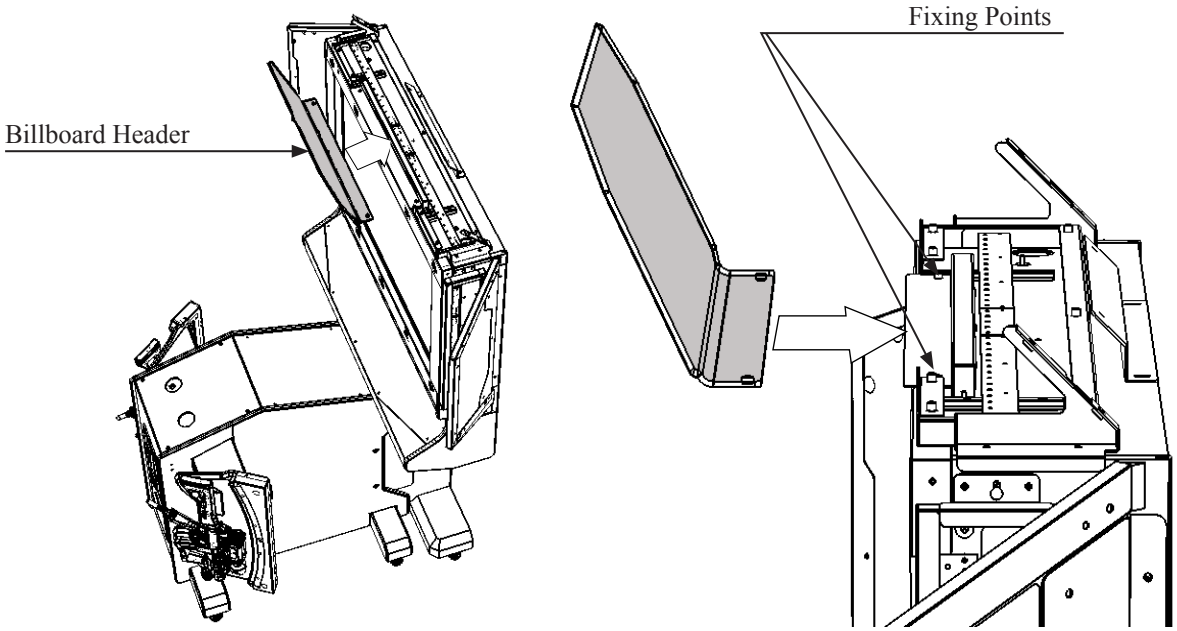

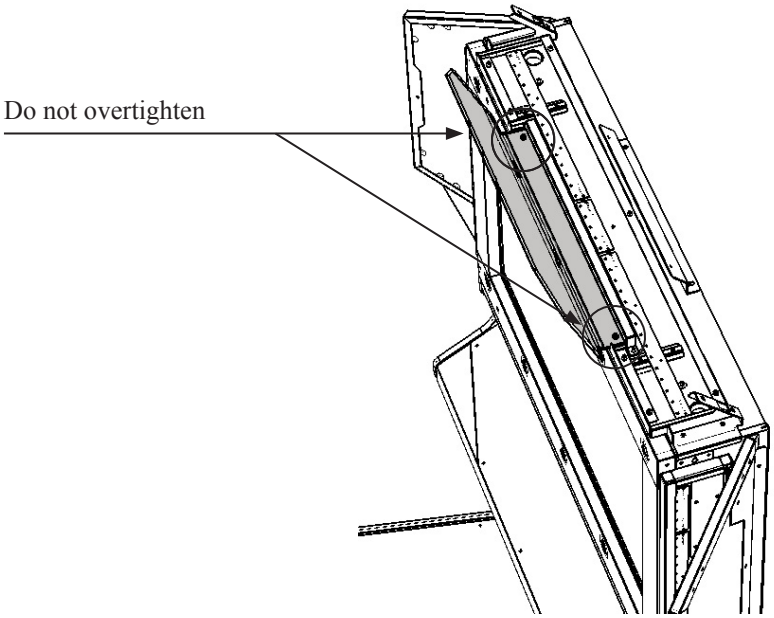

IMPORTANT

Please do not overtighten the screws which secure the Billboard Header in place. The Billboard Header is made from an acrylic and is very fragile. Over tightening the fixing screws may cause damage.

You can get this game at www.magic-play.eu

You can get this game at www.magic-play.eu

6-1-3 INSTALLING THE ASSY UPPER REFLECTOR

⚠ CAUTION

- **The Upper Reflector weighs approx 12kg. Have at least 2 people during this operation. Working alone could result in personal injuries, etc.**
- **To perform work safely and securely, be sure to prepare a step which is in a safe and stable condition. Performing work without using a step may lead to injury of damage to components.**

1 Fit and secure the Assy Upper Reflector to the top of the Display Cabinet in the position shown using the M6x25 HEX BLT W/S BLK (4) and M4x25 Mscr PH PAN BLK (2). The fixings are already placed within the locations and will need to be removed prior fitting.

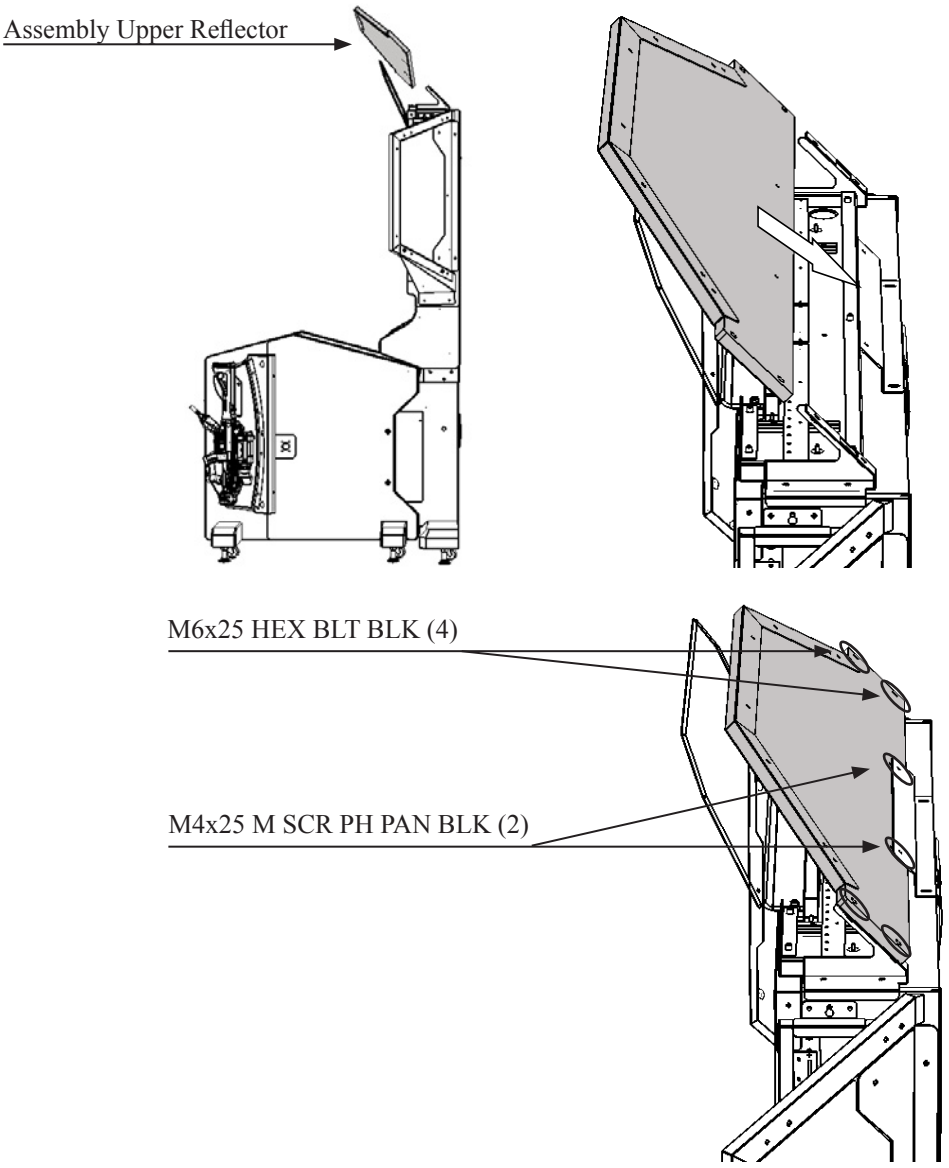

You can get this game at www.magic-play.eu

You can get this game at www.magic-play.eu

2 Fit and secure both Left and Right UPPER BKTS in the positions shown. Once located secure using M4x12 M SCR TH BLK (8) from the rear.

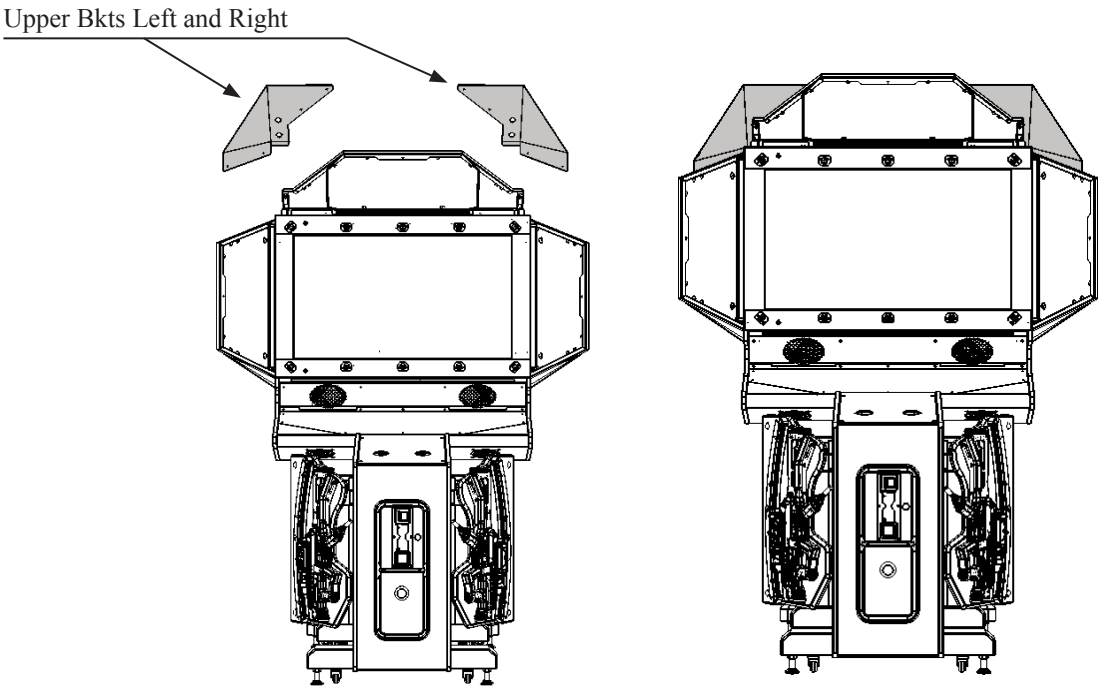

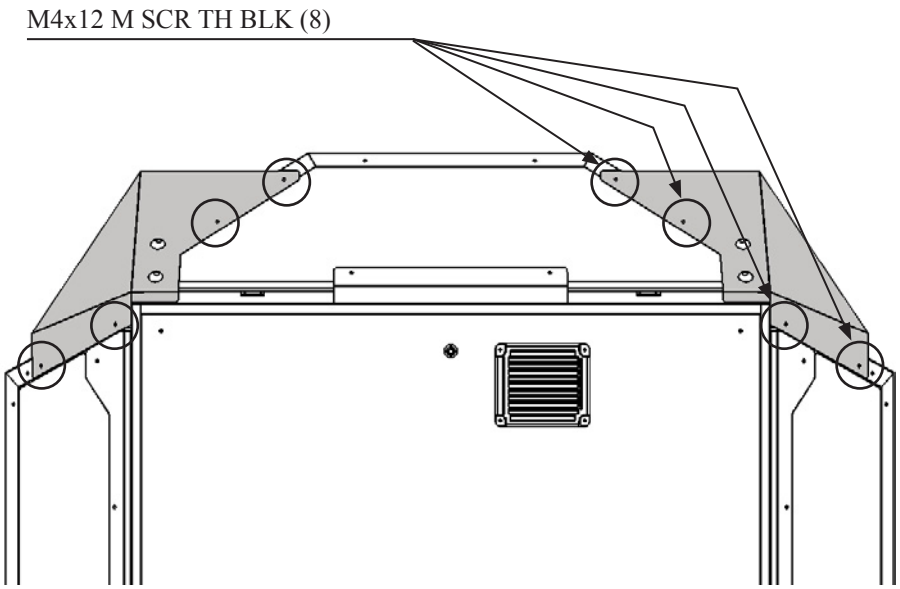

3 Once all installation parts have been fitted, please take the time to review to work to ensure all parts are securely fitted to the cabinet.

You can get this game at www.magic-play.eu

You can get this game at www.magic-play.eu

6-1-4 INSTALLING EXTENDED CABINET

This version of the OPERATION GHOST cabinet has been design to be operated in both NORMAL and EXTENDED formats. The reasons for this is so that the operator can choose the format of the cabinet to suit location. If it is difficult to operate the cabinet in "extended" format because the location does not either have the space or that the cabinet may block access to doors or walkways, then operation in the NORMAL format would be recommended.

If location permits operation in the "extended" format then please follow these instructions for safe installation/operation.

⚠ CAUTION

- **To perform work safely and securely do not attempt to carry out this procedure single handed. Have at least one other person to help in this procedure. To carry out this procedure single handed may result in serious injury or may damage the product. Follow the instructions carefully and ensure that each point has been carried out in its entirety.**

1 Position the cabinet into the desired location. Once positioned lower the front leg levellers only so that the castors are raised approximately 5mm from the floor

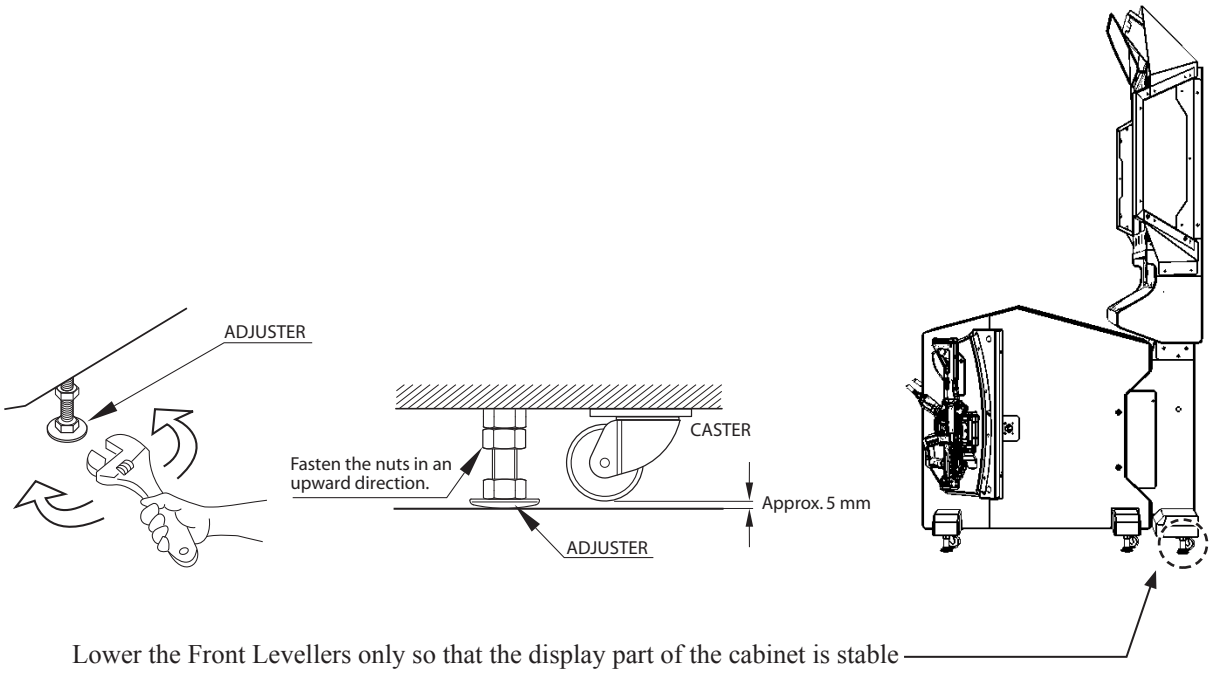

You can get this game at www.magic-play.eu

You can get this game at www.magic-play.eu

2 Once the leg levellers on the front cabinet have been firmly grounded - remove the M8x30 Bolts (4) from both sides of the cabinet.

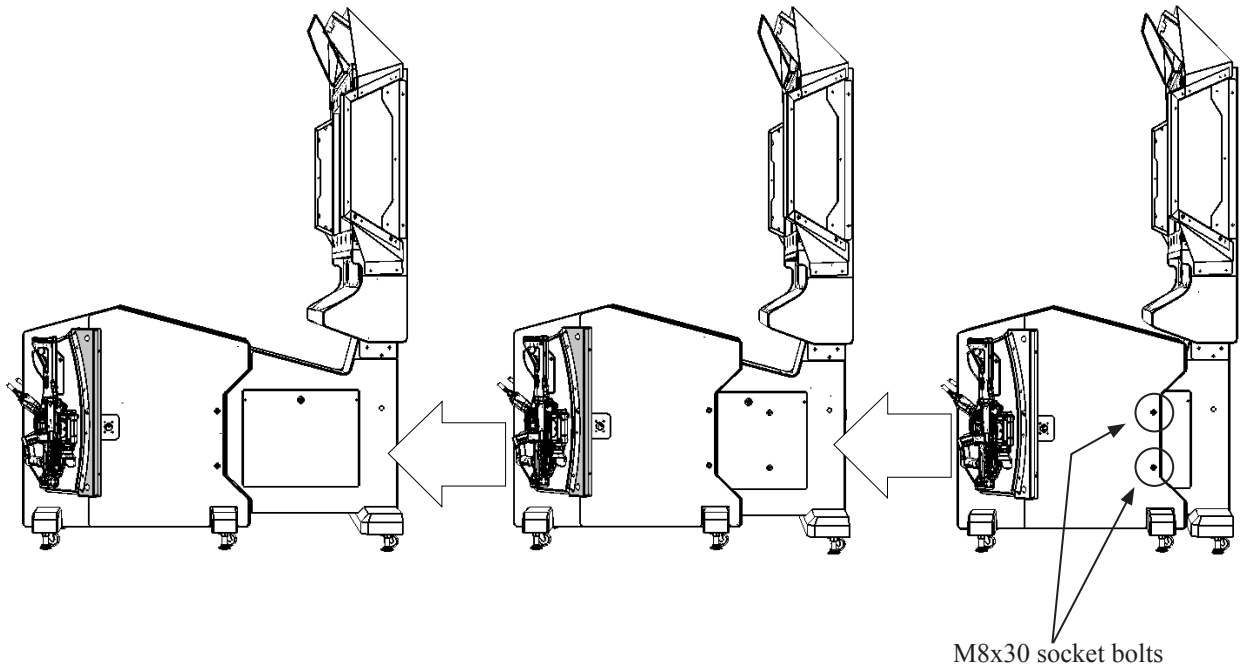

3 Holding onto the shaded areas, carefully pull the rear cabinet out towards you to reveal the side door. Once the cabinet has been fully extended, replace the M8 bolts to secure the cabinet position.

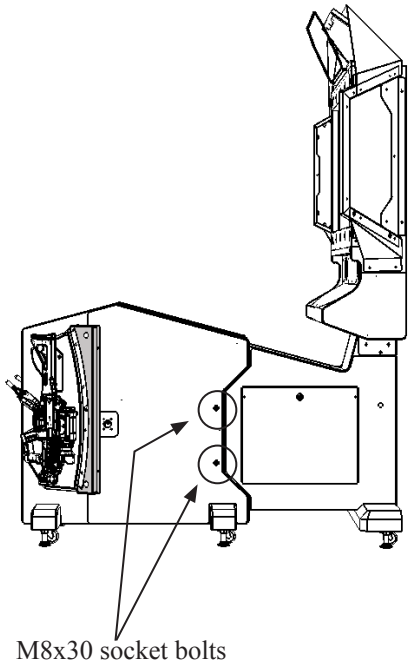

⚠ WARNING

- **The M8 socket bolts MUST be relocated whether using as a "compressed or extended"cabinet. Failing to refit these fixings after installation will result in the cabinet becoming unstable and may cause injury to players or observers.**

You can get this game at www.magic-play.eu

You can get this game at www.magic-play.eu

6-3 FIXATION TO SITE

⚠ WARNING

- **Make sure that all the adjusters contact the floor. Otherwise the cabinet could move, causing an accident.**
- **Provide a ventilation space at least 20cm wide behind the cabinet. There are ventilation holes on the back of the cabinet. Do not block the ventilation holes. Doing so could trap heat inside resulting in fire. It could also result in equipment damage or cause parts to become exhausted prematurely.**

The product is equipped with 6 casters and 6 adjusters.

When installation position / site has been determined, have the adjusters come in direct contact with the floor. Establish a gap of about 5 mm between the floor and the casters and adjust the unit so that it will remain level.

1. Move the product to the installation site.
2. Bring the adjusters into direct contact with the floor. Use a wrench to align the height of the adjusters until the cabinet is perfectly level.
3. After setting, turn adjuster nuts upwards to tighten them and secure adjuster heights.

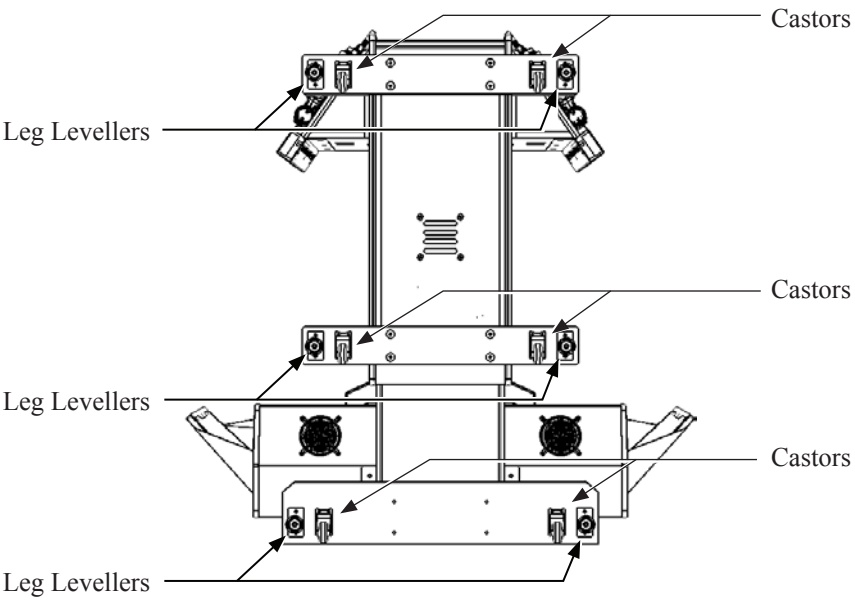

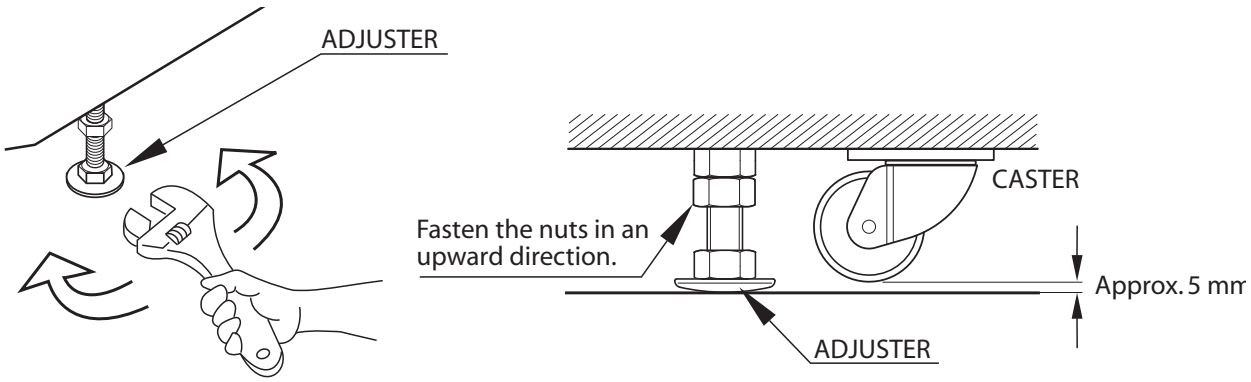

You can get this game at www.magic-play.eu

You can get this game at www.magic-play.eu

⚠ WARNING

- **Provide a ventilation space at least 20cm wide behind the cabinet. There are ventilation holes on the back of the cabinet. Do not block the ventilation holes. Doing so could trap heat inside resulting in fire. It could also result in equipment damage or cause parts to become exhausted prematurely.**

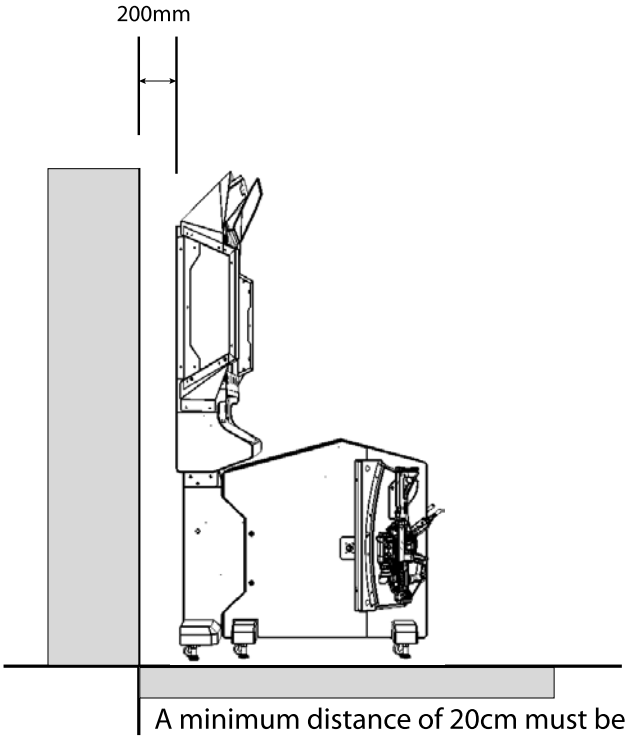

A minimum distance of 20cm must be provided at the rear of the cabinet to maintain airflow

You can get this game at www.magic-play.eu

You can get this game at www.magic-play.eu

6-4 POWER SUPPLY AND OTHER CONNECTIONS

⚠ WARNING

- **Use the power supply equipped with an earth leakage breaker. Use of power supply without such a breaker could result in fire if there is a current leakage.**
- **Have available a securely grounded indoor ground terminal. Without proper grounding, customers could be electrocuted and product operations might not always be stable.**
- **Do not expose the power cord or ground wire. If these are exposed, customers could stumble over them, for instance, and easily damage them. Additionally, if these lines are damaged, there could be a risk of electrical shock or short circuit. Set these lines at locations where they will not interfere with customer traffic, or attach covers to them.**
- **After laying out the power cord on the floor, be sure to always protect it. If the power cord is left exposed, it can easily be damaged, resulting in electrical shock.**

1 Confirm that the main switch is at OFF.

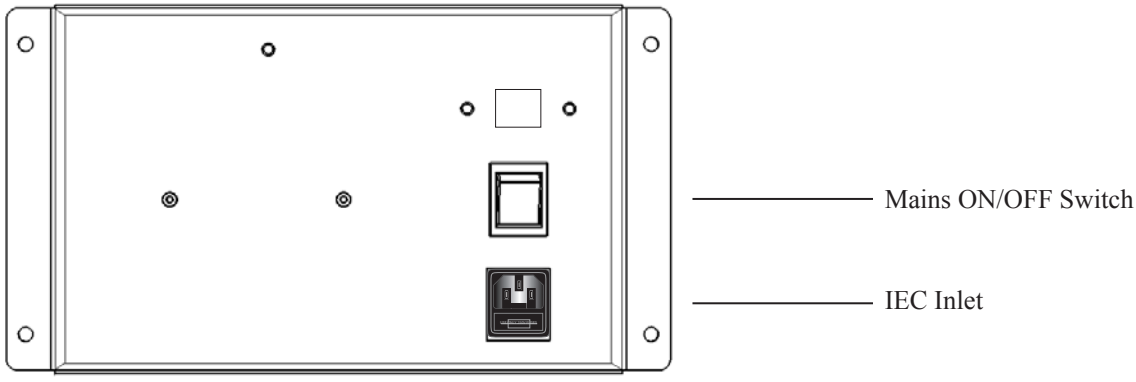

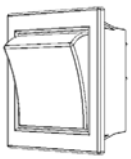

Mains Switch shown in OFF position

You can get this game at www.magic-play.eu

You can get this game at www.magic-play.eu

2 Fully insert the power cord connector on the side opposite the power plug into the AC unit IEC inlet. Insert the power cord plug into the outlet.

3 The power code is laid out indoors. Protect the power cord by attaching wire cover to it.

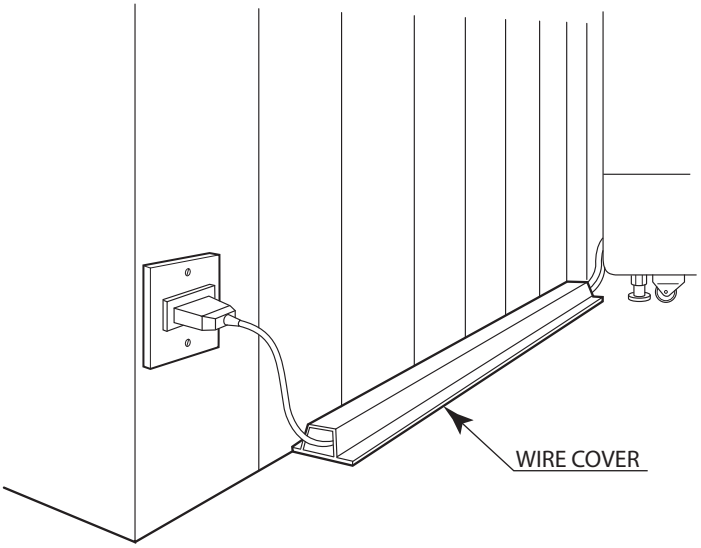

6-5 TURNING ON THE POWER

Set the main switch of the AC unit to ON and engage the power.

When you turn on the power a loading screen will be displayed on screen.

After the SEGA LOGO start up screen is displayed on the LCD screen, the Advertise (Attract) Mode will start.

The LED's from around the screen will run along with the attract mode and the Billboard will illuminate.

Start up sounds are output from the speakers on the left and right of the cabinet together with the speakers within the controllers.

Even when the power source has been cut off, credit count, ranking data, game settings and bookkeeping data are kept stored in the product. However, fractional coin counts (inserted coins that do not amount to one credit) and bonus adder counts are not kept.

You can get this game at www.magic-play.eu

You can get this game at www.magic-play.eu

COMPONENTS WHICH CHANGE STATE WHEN POWER IS APPLIED

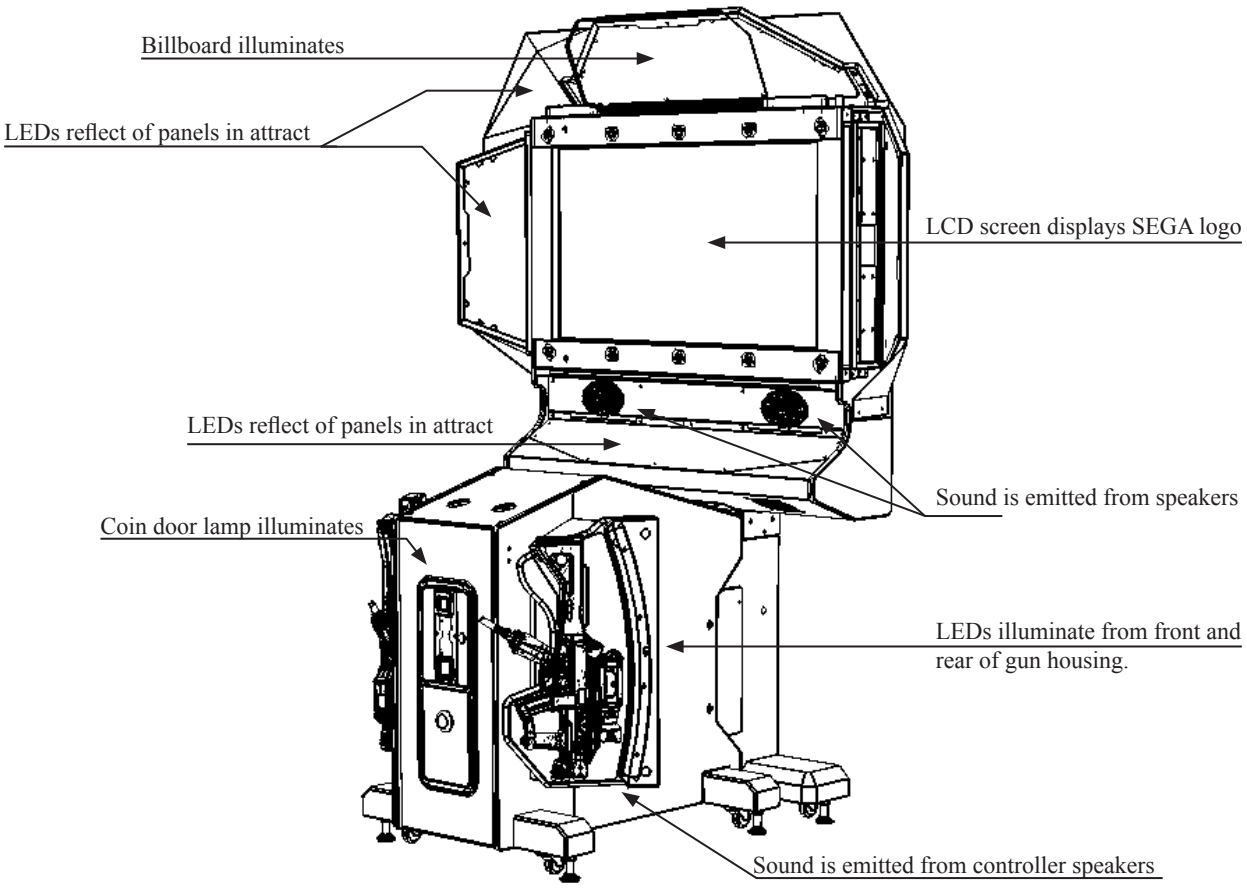

You can get this game at www.magic-play.eu

You can get this game at www.magic-play.eu

6-6 CONFIRMATION OF ASSEMBLY

In the test mode, ascertain that the assembly has been made correctly and IC Board is satisfactory.
In the test mode, perform the following test: (refer to chapter 9).

9-3-3 INPUT TEST

This menu is used to test the system inputs such as steering, pedals and buttons. To implement the test, press each device that is listed and check the results on screen.

9-3-4 OUTPUT TEST

This menu is used to test the system outputs such as Lamps and LED.

9-8 SPEAKER TEST

As this system utilises a Credit Board PCB, it is important that the setting remain 1 COIN 1 PLAY. Deviation from this setting when using the Credit Board PCB can result in unusual credit outputs.

9-9 COIN SETTINGS

As this system utilises a Credit Board PCB, it is important that the setting remain 1 COIN 1 PLAY. Deviation from this setting when using the Credit Board PCB can result in unusual credit outputs.

9-3-7 CONTROLLER ADJUSTMENT

This test is required to calibrated both Gun Controllers. This procedure is always carried out at the factory before dispatch. However, certain conditions can have an effect on calibration and it is recommended that re-calibration be carried out at point of installation.

You can get this game at www.magic-play.eu

You can get this game at www.magic-play.eu

6-7 APPLYING WARNING LABELS (EPILEPTIFORM SEIZURES)

⚠ CAUTION

- **The operator MUST apply the Epileptiform Seizure Label to this product. Failing to apply this label may result in the player/observer suffering from a photosensitive seizure. Warning the potential player/ observer of this before the start of a game may prevent such accidents.**
- **It is also important to apply the correct language label for each location. There are nine (9) different language labels - please apply the label which matches your location.**

STOP IMPORTANT

Application of any warning labels must be placed in a location which is easy for the player/observer to read. Please follow the instructions below and apply the label in the location stated.

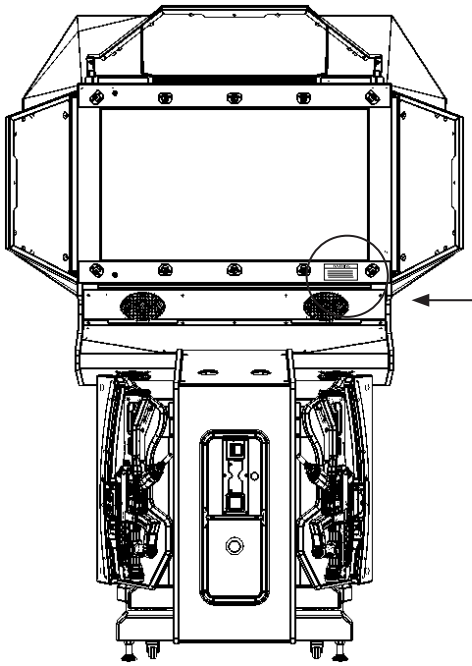

The Epileptically Seizure label is supplied in 9 different languages. Please choose the label which matches your language location.

Apply the label to the bottom right hand corner of the monitor mask. This location is unobstructed and can be easily read by players and observers alike.

You can get this game at www.magic-play.eu

You can get this game at www.magic-play.eu

7 PRECAUTIONS WHEN MOVING THE MACHINE

⚠ WARNING

- Always disconnect the power cable before moving the product. If it is moved with the power cable connected, the cable could be damaged, causing fire or electric shock.
- To move the unit over the floor, pull in the adjusters and have the casters contact the floor. While moving the unit, be careful that the casters do not roll over the power cord or the ground wire. If cord or wire is damaged, there could be electrical shocks and/or short circuits.
- When crossing a sloped or stepped area, always have the machine travel lengthways. Travelling with the machine in a sideways position could result in the machine falling over onto its side. Always use a minimum of two people working together plus lifting apparatus to accommodate slopped areas or stairs.
- To lift up the cabinet, hold it at the bottom at the designated lifting points. If you hold it anywhere else, the weight of the cabinet could cause damage to parts or attachments, resulting in injury.
- Do not push the cabinet from the side when moving. Pushing from the side may result in the cabinet falling over.
- Do not move the cabinet without the side retaining bolts fitted. Doing so may cause damage and injury.

STOP IMPORTANT

- When moving the cabinet, do not grip or push the Reflector Plates. Doing so could deform or damage the part.
- If moving through a door or place with a low ceiling such as an elevator, you should take apart the billboard and reflector plates.

You can get this game at www.magic-play.eu

You can get this game at www.magic-play.eu

7-1 PRECAUTIONS WHEN MOVING FROM SITE

STOP IMPORTANT

- **When moving the cabinet, do not grip or push the Reflector Plates. Doing so could deform or damage the part.**
- **If moving through a door or place with a low ceiling such as an elevator, you should take apart the billboard and Upper Reflector plate.**

Detailed instructions for removing the Assy Billboard and Reflector Plates can be found in Chapter 6 of this manual. Please follow these instruction in reverse order for removal.

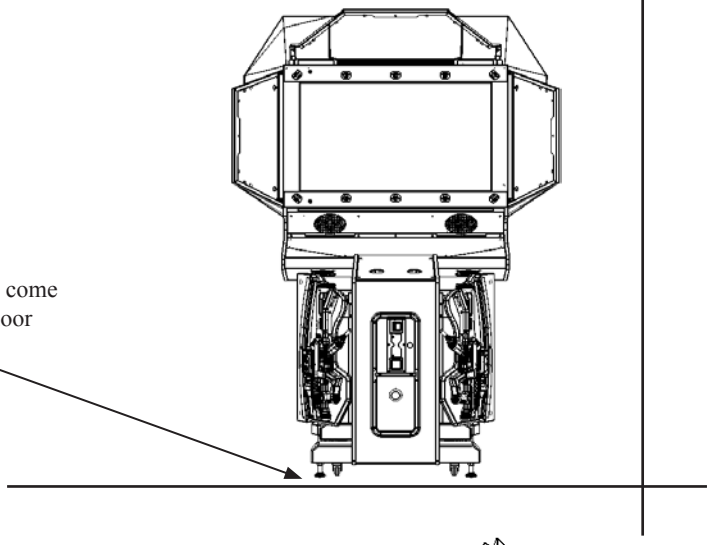

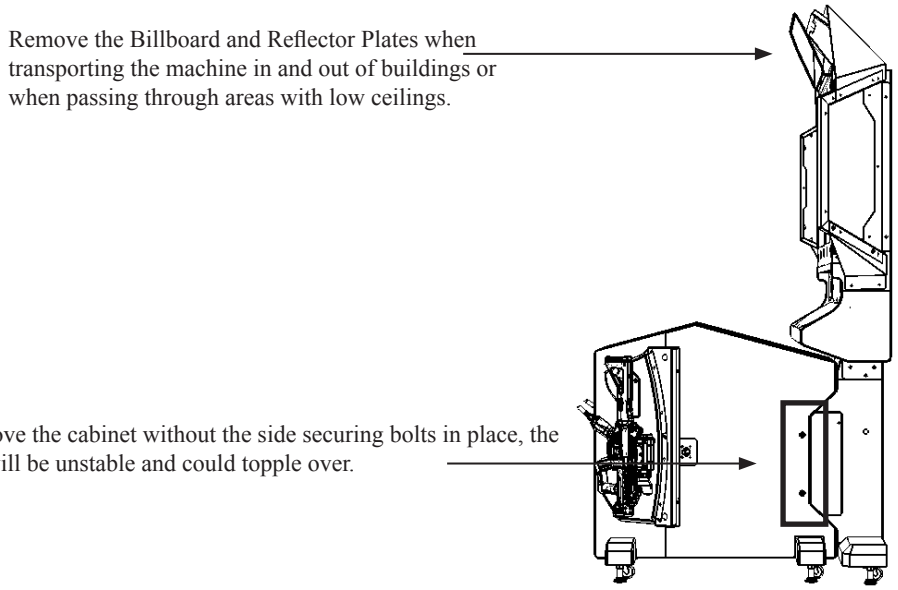

You can get this game at www.magic-play.eu

You can get this game at www.magic-play.eu

8 GAME DESCRIPTION

8-1 HOW TO PLAY

When you insert coins, they will be counted in the credit display at the bottom of the screen. When you insert enough coins for a game, the message at the bottom will change from “INSERT COIN(S)” to “PRESS START BUTTON,” and the start buttons on both sides will flash. Up to 24 credits can be counted at once. Coins inserted after 24 credits are recorded will not be counted or returned. However, the number of coins inserted will be counted in the data display and the coin meter. (See 11-2.)
NOTE: The number of credits required for a game can be set in SYSTEM TEST MODE.
(See Chapter 10.)

Which START button you press determines which side you play on. Once you press the start button, the game begins.

Once the game starts, the video demonstration will play, followed by the 1 title, and then it will go to the actual game.

8-2 GAME SCREENS

The score, ammo remaining, life and shooting mode of the player playing on the left (PLAYER 1) are shown at the left side of the screen, while those of the player playing on the right (PLAYER 2) are shown at the right side of the screen. Credits are always displayed at the bottom of screen. If there is no player, the required number of credits is displayed instead.

GAME screen

You can get this game at www.magic-play.eu

You can get this game at www.magic-play.eu

8-3 RELOADING

When the player fires all ammo remaining, the gun will be empty. The player can then reload the weapon by aiming it outside the screen. The player can reload this way even if there are still bullets left.
The gun is also reloaded automatically when the trigger is pulled with no ammo remaining. However, this type of reload takes longer than a normal reload.

The player can switch shooting mode during gameplay using the shot selector.

8-4 SWITCHING SHOOTING MODE

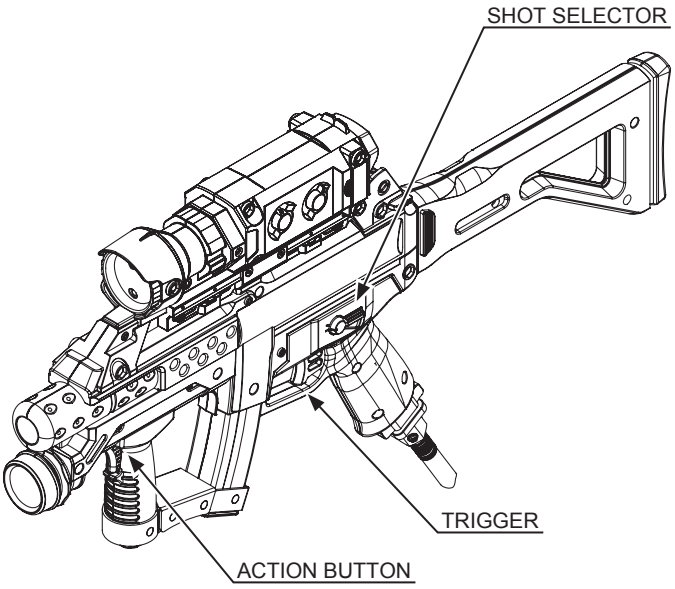

The types of shooting mode and their features are as follows.

FULL AUTO	Bullets are fired continuously as long as the trigger is held. You have limited ammunition. The number of rounds remaining is displayed to the side of the shooting mode. (See 8-2.) The number of rounds can be increased by scoring critical hits or obtaining items.
3-SHOT BURST	Pulling the trigger once fires a burst of 3 rounds in a row. You have unlimited ammunition.
SEMI AUTO	Pulling the trigger once fires 1 shot only. You have unlimited ammunition.

When shooting mode is switched, the player's crosshair is changed to the applicable shooting mode crosshair.

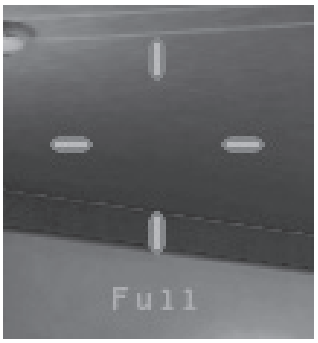

FULL AUTO CROSSHAIR

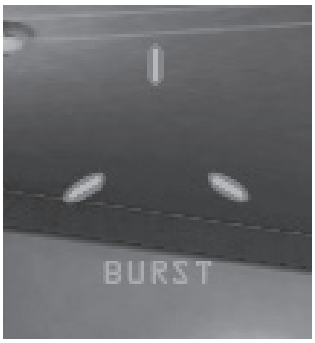

3-ROUND BURST CROSSHAIR

SEMI AUTO CROSSHAIR

You can get this game at www.magic-play.eu

You can get this game at www.magic-play.eu

8-5 RTO (REAL TIME TACTICAL ORDER)

While progressing through the game, the RTO icon will sometimes be displayed at the top of the screen. By pressing the action button while the RTO icon is displayed, the player can issue tactical orders to their teammates.
NOTE: Giving tactical orders via the RTO icon makes it easier to progress through the game, but in some cases the player will earn a higher score for progressing without giving tactical orders.

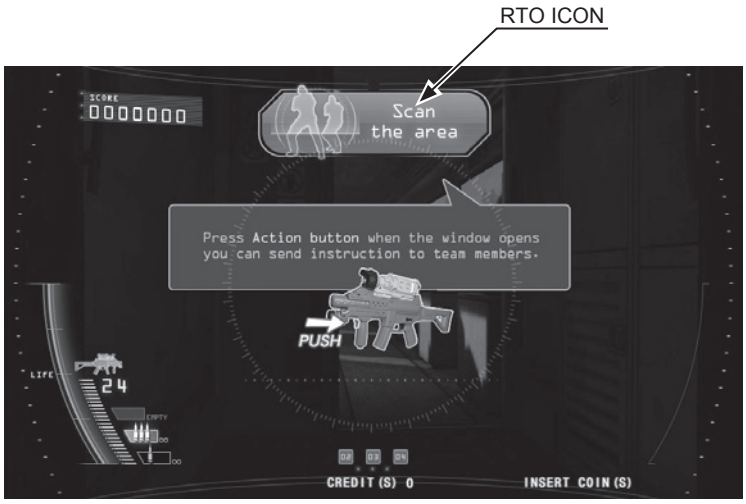

RTO screen

8-6 ITEMS

Various items appear when the player shoots item boxes in the background. The player can then gain the effects of those items by shooting them.

ITEM BOX

LIFE RECOVERY

FULL AUTO AMMO INCREASE

You can get this game at www.magic-play.eu

You can get this game at www.magic-play.eu

8-7 EVENTS

Various events occur in the course of the game.
An explanation of the control method for the event will be displayed before the event begins.
Successfully completing events will lead to an increase in the mission success rate (the evaluation displayed after clearing the mission), and the player can earn a higher score.

EVENTS screen

8-8 BATTLES WITH BOSSES

A unique boss awaits the player at the end of each stage.
When the boss begins an attack, a cancel gauge will sometimes appear.
The boss's attack can be avoided by forcing the cancel gauge down to zero.

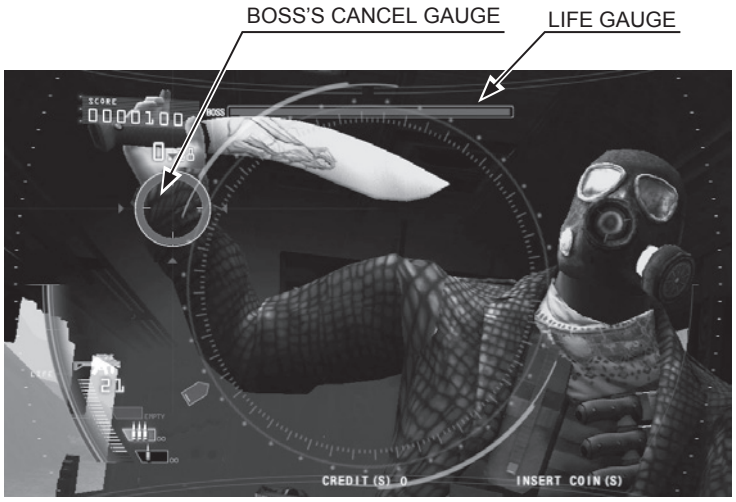

BOSS BATTLE screen 1

You can get this game at www.magic-play.eu

You can get this game at www.magic-play.eu

Shooting the boss drains the boss's LIFE gauge.
Attacking the boss's weak point drains the boss's LIFE gauge significantly.
When the boss's LIFE gauge reaches zero, the boss is defeated.

BOSS BATTLE screen 2

8-9 GAME OVER

If both players run out of LIFE, the game ends.

1 If you want to join the game during play, insert coins and press the START button at any time. If there are enough credits remaining to play, the START button on the side with no one playing flashes continuously. Join the game by pressing the flashing START button.

2 When all LIFE is lost, the continue message is displayed. If you wish to continue, insert the required number of coins and press the START button again. If there are enough credits remaining to CONTINUE, you can join again by pressing the START button.
NOTE: The number of credits required to continue can be set in SYSTEM TEST MODE (See Chapter 10.)

3 If your total points rank among the top 50 after completing all the stages in the game, you can enter your name.

You can get this game at www.magic-play.eu

You can get this game at www.magic-play.eu

8-10 CONTINUE PLAY BONUS

The player receives body armour as a continue play bonus when they choose to continue.
Body armour will take the damage from 1 enemy attack while equipped.
NOTE: This feature can be set in GAME TEST MODE. (See 11-5.)

CONTINUE PLAY BONUS screen

CONTINUE PLAY BONUS PROMPT

You can get this game at www.magic-play.eu

You can get this game at www.magic-play.eu

9 EXPLANATION OF TEST AND DATA DISPLAY

Perform tests and data checks periodically by manipulating the TEST Button and SERVICE Button in the cabinet. Follow the instructions in this chapter to conduct checks when the game machine is first installed, when money is being collected, or when the game machine does not operate properly.

Shown overleaf are the tests and screens to be used for different problems.

⚠ WARNING

- **When installing 2 of more cabinets which are networked together. The GAME SETTINGS which are adjusted within the first cabinet are reflected throughout all cabinets within that network.**

STOP IMPORTANT

- **When changing the game configuration within the TEST MODE, be sure to exit all screens in the correct manner by choosing exit. DO NOT turn the machine ON/OFF to resume game. Changes WILL NOT take effect unless the correct method is used.**

You can get this game at www.magic-play.eu

You can get this game at www.magic-play.eu

9-1 SWITCH UNIT AND COIN METER.

⚠ WARNING

Never touch places other than those specified. Touching places not specified can cause electric shock and short circuit accidents.

STOP IMPORTANT

- **Adjust the sound to the optimum volume, taking into consideration the environmental requirements of the installation location.**
- **Removing the Coin Meter circuitry renders the game inoperable.**

9-1-1 SWITCH UNIT

Open the coin chute door, and the switch unit shown will appear.
The functioning of each SW is as follows:

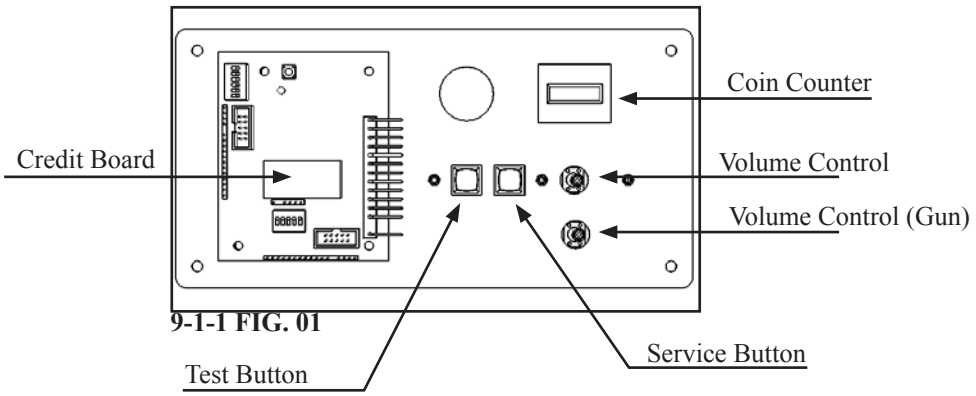

9-1-1 FIG. 01

TEST Button (TEST):	For the handling of the Test Button, refer to the following pages.
SERVICE Button (SERVICE):	Gives credits without registering on the coin meter.
Sound Volume Switch (SOUND VOLUME):	Adjust sound volume for all of the machines' speakers.
Coin Counter	Counts and displayes coins in $0.10 units.
Credit Board	Counts coins to be used a price of play

You can get this game at www.magic-play.eu

You can get this game at www.magic-play.eu

9-2 SYSTEM TEST MODE

IMPORTANT

The details of changes to Test Mode settings are saved when you exit from each Test Mode by selecting EXIT. Be careful because if the power is turned off before that point, changes to the settings will be lost.

SYSTEM TEST MODE can be used to check the information or the operation of RINGWIDE, adjust Monitor color, and perform coin/credit settings.

1 Press the TEST Button after powering on the unit to display the following SYSTEM TEST MODE.

■ **SYSTEM TEST MODE Screen**

SYSTEM TEST MODE

GAME TEST MODE 9-3
SYSTEM INFORMATION 9-4
STORAGE INFORMATION 9-5
JVS TEST 9-6
MONITOR TEST 9-7
SPEAKER TEST 9-8
COIN ASSIGNMENTS 9-9
CLOCK SETTING 9-10
NETWORK SETTING 9-11
-> EXIT 9-12

SELECT WITH SERVICE BUTTON
AND PRESS TEST BUTTON

2 Use the SERVICE Button to move the cursor to the desired test item.

3 Press the TEST Button to enter the selected item's test.

4 After the test is complete, move the cursor to EXIT and press the TEST Button to return to the game play screen.

For a detailed explination on the SYSTEM TEST MENU, please refer to chaper 16 - Game Board.

You can get this game at www.magic-play.eu

You can get this game at www.magic-play.eu

9-3 GAME TEST MODE

IMPORTANT

- **To change settings in the GAME TEST MODE, simply making changes on the setting screen will not be effective. Complete the TEST MODE in normal fashion.**
- **Use with the specified settings. If settings other than those specified are used, inappropriate operations or malfunction may occur.**

Press the TEST Button to enter TEST MODE and bring up the SYSTEM TEST MENU screen. (See Chapter 9.) SERVICE Button to select "GAME TEST MODE," then press the TEST Button to bring up the GAME TEST MENU screen.

9-3-1 GAME TEST MENU

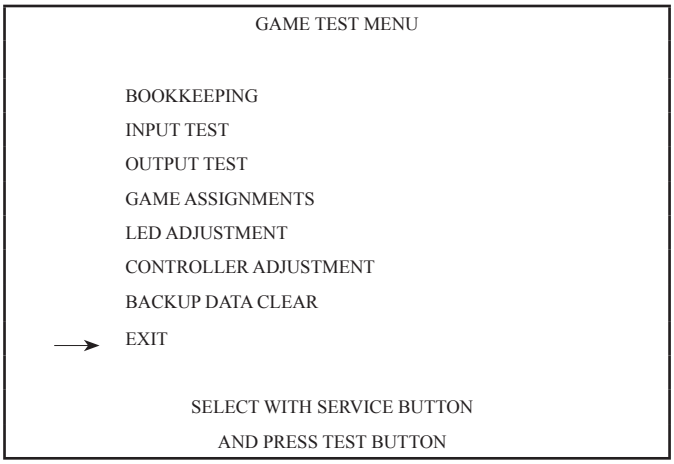

GAME TEST MENU

■Controls

- Press the SERVICE Button to select menu item.
- Press the TEST Button to comfirm the selected item.
- Selecting EXIT and pressing the TEST Button, the SYSTEM TEST MENU screen reappears.

■Menu Items

BOOKKEEPING	Displays all recorded game data.
INPUT TEST	Test each input device used for game.
OUTPUT TEST	Test each output device used for game.
GAME ASSIGNMENTS	Adjust all game settings.
LED ADJUSTMENT	Settings for the full-color LEDs surrounding the monitor.
CONTROLLER ADJUSTMENT	Adjusts aim settings for control units.
BACKUP DATA CLEAR	Erases all types of game records.

You can get this game at www.magic-play.eu

You can get this game at www.magic-play.eu

9-3-2 BOOKKEEPING

Each game reord can be viewed

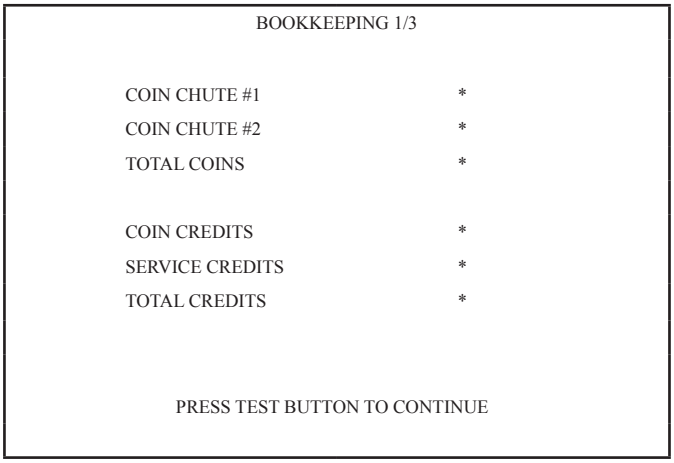

BOOKKEEPING SCREEN 1/3

COIN CHUTE #1	Number of coins inserted in coin chute 1.
COIN CHUTE #2	Number of coins inserted in coin chute 2.
TOTAL COINS	Total Number of coins inserted in coin chute 1 and 2.
COIN CREDITS	Number of credits for coins inserted.
SERVICE CREDITS	Number of credits entered with the SERVICE Button.
TOTAL CREDITS	Total number of all credits.

This test is used to review statistical data from the system. It consists of 3 screens of data. Page 1 displays an overview of the coins and credits data.

Press the Test Button to go to Page 2.

You can get this game at www.magic-play.eu

You can get this game at www.magic-play.eu

Bookkeeping – Page 2 – Data on Average Game Times

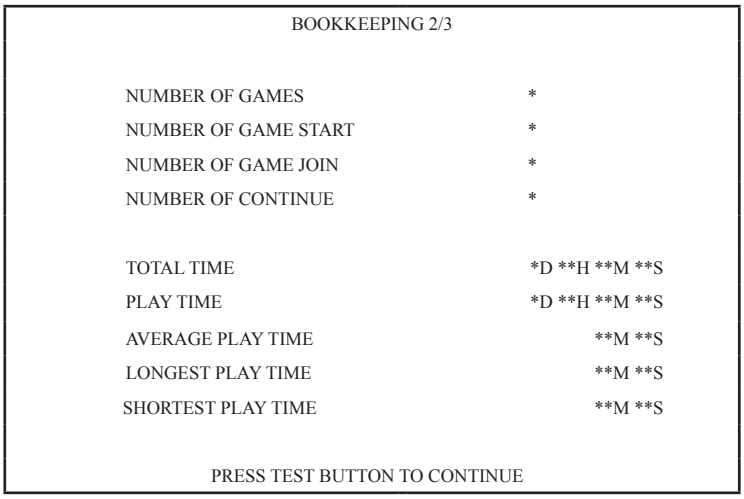

BOOKKEEPING SCREEN 2/3

NUMBER OF GAMES	Total number of games played for 1P and 2P.
NUMBER OF GAME START	Total number of games played from the start for 1P and 2P.
NUMBER OF GAME JOIN	Total number of games joined partway through for 1P and 2P.
NUMBER OF CONTINUE	Total number of continues for 1P and 2P.
TOTAL TIME	The cabinet's total operating time.
PLAY TIME	Amount of time game has been played.
AVERAGE PLAY TIME	Average play time for one game.
LONGEST PLAY TIME	Longest play time for one game.
SHORTEST PLAY TIME	Shortest play time for one game.

Press the Test Button to go to Page 3.

You can get this game at www.magic-play.eu

You can get this game at www.magic-play.eu

Bookkeeping – Page 3 – Data on Game Mode Plays

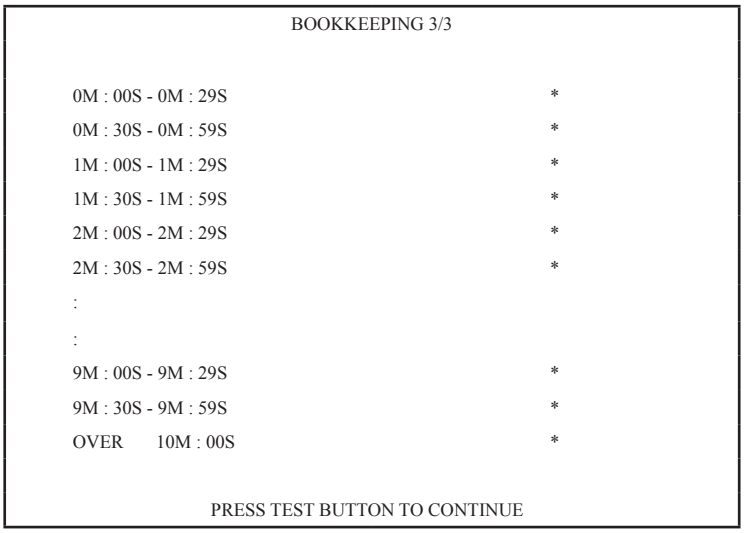

BOOKKEEPING 3/3

This displays play times on a scale from 0M00S to 9M59S based on 30-second intervals.
All play times 10 minutes or over are included in the item OVER 10M00S.

The moment the START button is pressed is considered to be the start of the game, and Game Over or Continue to be the end.
(A continue is considered to be a new game. Even if the player keeps continuing and clears the game, the time from game start to finish is not taken as their play time.)

Press the Test Button to return to the Game Test Mode screen.

You can get this game at www.magic-play.eu

You can get this game at www.magic-play.eu

9-3-3 INPUT TEST

Select INPUT TEST to display the following screen and check the status of input devices.
This test should be used periodically to check that each input device is functioning correctly.

INPUT TEST		
PLAYER	1	2
TRIGGER	OFF	OFF
ACTION	OFF	OFF
CHANGE	OFF	OFF
SIGHT-X	**	**
SIGHT-Y	**	**
SCREEN	OUT	OUT
START	OFF	OFF
SERVICE	OFF	
TEST	OFF	
SELECT WITH SERVICE		
AND PRESS TEST BUTTON		

INPUT TEST screen

■Controls

- The SCREEN setting is normal if it changes from OUT to IN when the control units are pointed at the screen.
- Input devices are working correctly if the corresponding menu item switches from OFF to ON when the device is operated.
- Press the TEST Button and the SERVICE Button simultaneously to return to GAME TEST MENU screen.

■Menu Items

TRIGGER	This will say ON when the triggers on the control units are being pulled and OFF when they are released.
ACTION	This will say ON when the action buttons on the control units are being pulled and OFF when they are released.
CHANGE	This will say ON when the shot selectors on the control units are being pulled and OFF when they are released.
SIGHT-X	This shows the aim location for the X direction on the control units.
SIGHT-Y	This shows the aim location for the Y direction on the control units.
SCREEN	This will say IN when the control units are aimed inside the screen and OUT when they are aimed outside the screen.
START	This will say ON when the START buttons are being pressed and OFF when they are released.
SERVICE	This will say ON when the SERVICE button is being pressed and OFF when it is released.
TEST	This will say ON when the TEST button is being pressed and OFF when it is released.

You can get this game at www.magic-play.eu

You can get this game at www.magic-play.eu

9-3-4 OUTPUT TEST

This screen is for confirming the proper operation of each output device used by the game.
Periodically use this screen to check the status of each output device.

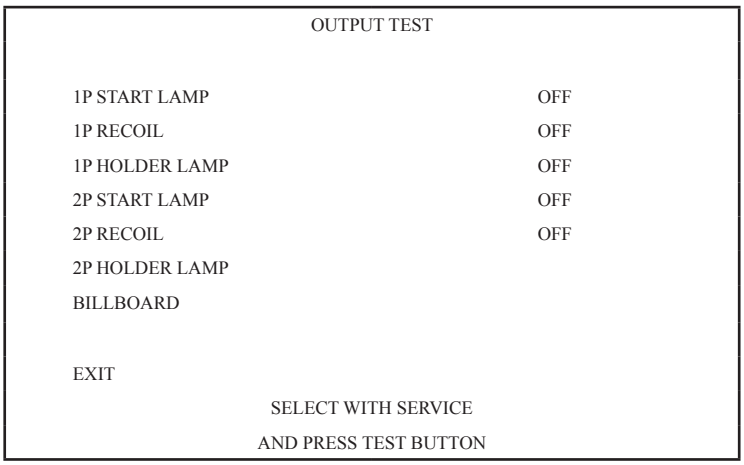

OUTPUT TEST screen

■Controls

- Press the SERVICE Button to select menu item.
- When the TEST Button is being pressed, the selected item will change from OFF to ON and the corresponding output device will operate.
- When the TEST Button is released, the selected item will change from ON to OFF and the corresponding output device will cease operation.
- Select EXIT and press the TEST Button to return to the GAME TEST MENU screen.

■Menu Items

1P/2P START LAMP	1P/2P START Button lamp
1P/2P RECOIL	Activates the solenoid in 1P/2P control unit. Reverts to OFF after one activation.
1P/2P HOLDER LAMP	1P/2P controller holder lamp
BILLBOARD	Lamp of the billboard above the monitor.

You can get this game at www.magic-play.eu

You can get this game at www.magic-play.eu

9-3-5 GAME ASSIGNMENTS

Adjust all game settings.

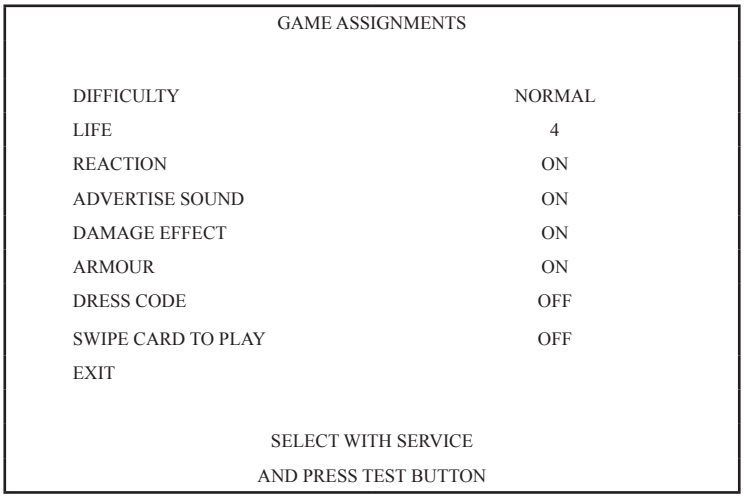

GAME ASSIGNMENTS screen

■Controls

- Press the SERVICE Button to select menu item.
- Press the TEST Button to change the value of the selected item.
- Select EXIT and press the TEST Button to return to the GAME TEST MENU screen.

■Menu Items

DIFFICULTY	Sets the level of difficulty.(Default setting: NORMAL) There are 5 levels: VERY EASY, EASY, NORMAL, HARD, VERY HARD.	
LIFE	The number of LIFE(s) the player will start the game with. (Default setting: 4) Can be set between 2 and 7.	
REACTION	Sets recoil from the 1P/2P control unit when firing the gun to ON/OFF. (Default setting: ON)	
	ON	When firing the gun, the 1P/2P control unit will recoil.
	OFF	When firing the gun, the 1P/2P control unit will not recoil.
ADVERTISE SOUND	Turns sound ON/OFF in advertise mode. (Default: ON) There are 5 levels : ON, 7/10, 5/10, 3/10, OFF.	
DAMAGE EFFECT	Switches effects when the enemy characters take damage ON/OFF. (Default setting: ON)	
	ON	Damage effects will be displayed.
	OFF	Damage effects will not be displayed.
ARMOUR	Sets the giving of body armor as a continue bonus when the player chooses to continue to ON/OFF. (Default setting: ON)	
	ON	Body armor will be provided when the player continues.
	OFF	Body armor will not be provided when the player continues.

You can get this game at www.magic-play.eu

You can get this game at www.magic-play.eu

DRESS CODE	Sets whether female soldier designs will be included in boss images to ON/OFF. (Default setting: OFF)	
	ON	Female soldier designs will not be included in boss images.
	OFF	Female soldier designs will be included in boss images.
SWIPE CARD TO PLAY	Sets the changing of the INSERT COIN(S) display to SWIPE CARD TO PLAY to ON/OFF. (Default setting: OFF)	
	ON	The INSERT COIN(S) display will be changed to SWIPE CARD TO PLAY.
	OFF	The INSERT COIN(S) display will not be changed.

You can get this game at www.magic-play.eu

You can get this game at www.magic-play.eu

9-3-6 LED ADJUSTMENT

Conduct adjustment of the full-color LEDs surrounding the monitor.

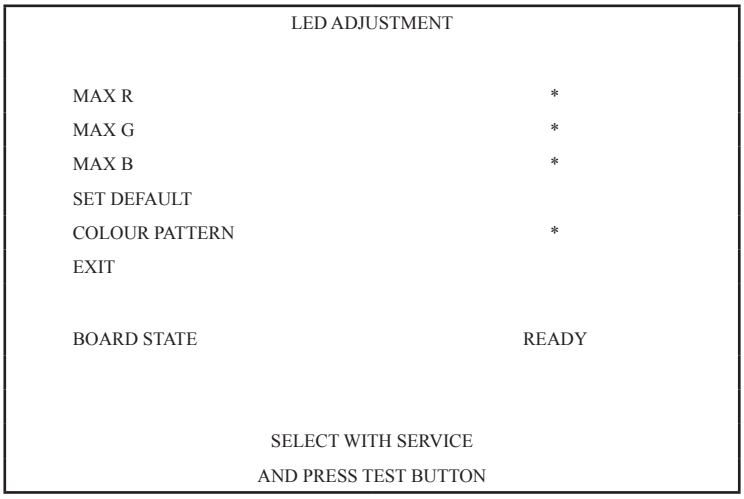

LED ADJUSTMENT screen

■Controls

- Press the SERVICE Button to select menu item.
- Press the TEST Button to change the value of the selected item.
- Select EXIT and press the TEST Button to return to the GAME TEST MENU screen.

■Menu Items

MAX R	Adjusts the brightness of red LEDs from 0.1 to 1.0 in gradients of 0.1. (Default setting: 1.0)	
MAX G	Adjusts the brightness of green LEDs from 0.1 to 1.0 in gradients of 0.1. (Default setting: 0.9)	
MAX B	Adjusts the brightness of blue LEDs from 0.1 to 1.0 in gradients of 0.1. (Default setting: 0.7)	
SET DEFAULT	Returns the LED color shades to their defaults.	
COLOR PATTERN	Switches the LED display color pattern: WHITE; BLUE; RED; GREEN; BLACK TO WHITE.	
BOARD STATE	Displays status of LED board.	
	READY	Usable status
	NOT READY	Undergoing formatting status
	NO LED BOARD	Unusable status

You can get this game at www.magic-play.eu

You can get this game at www.magic-play.eu

9-3-7 CONTROLLER ADJUSTMENT

This screen allows for the adjustment of the control unit's crosshair settings which are used during gameplay.

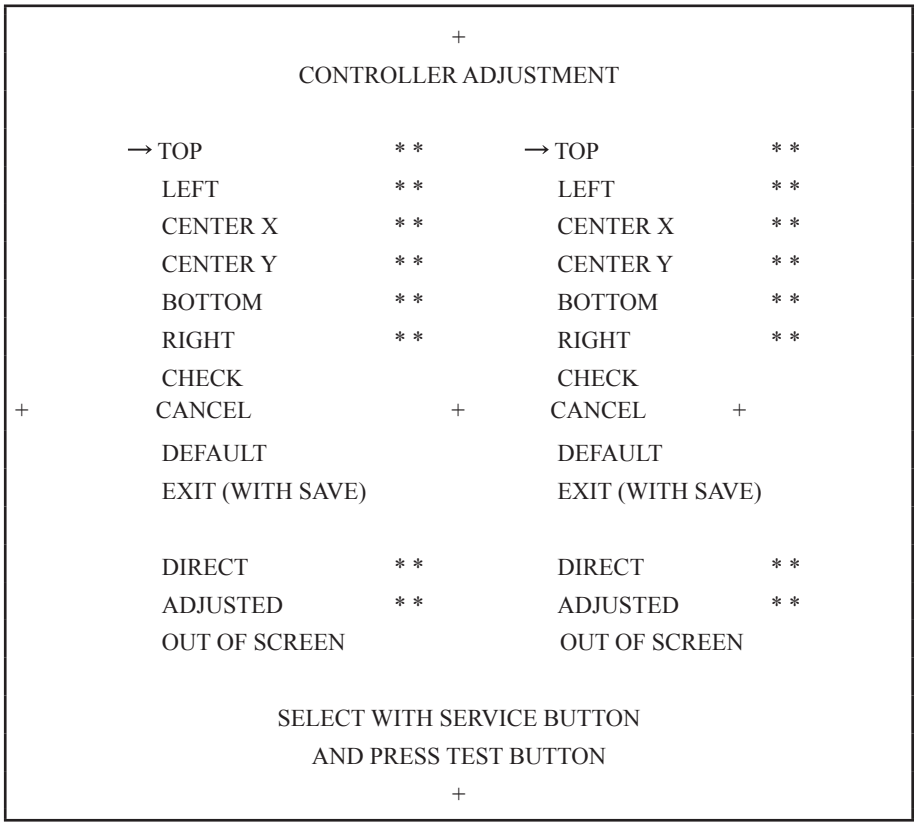

CONTROLLER ADJUSTMENT screen

■Controls

- Press the SERVICE Button or START Button to select menu item.
- Select EXIT (WITH SAVE) and press the TEST Button to save the values you have set and return to the GAME TEST MENU screen.

■Menu Items

TOP*	Sets the crosshair value for the upper limit of the Y axis. Aim at the + mark at the top of the screen and pull the trigger to confirm setting.
LEFT*	Sets the crosshair value for the left limit of the X axis. Aim at the + mark at the left of the screen and pull the trigger to confirm setting.
CENTER X*	Sets the crosshair value for the center of the X axis. Aim at the + mark in the center of the screen and pull the trigger to confirm setting.
CENTER Y*	Sets the crosshair value for the center of the Y axis. Aim at the + mark in the center of the screen and pull the trigger to confirm setting.
BOTTOM*	Sets the crosshair value for the lower limit of the Y axis. Aim at the + mark at the bottom of the screen and pull the trigger to confirm setting.
RIGHT*	Sets the crosshair value for the right limit of the X axis. Aim at the + mark at the right of the screen and pull the trigger to confirm setting.
CHECK	Displays the newly adjusted crosshair settings on-screen.
CANCEL	Returns the newly adjusted crosshair settings to the previous settings.
DEFAULT	Set the values for the control units to default.

*Values on the left are the previous settings, and values on the right are the new settings.

You can get this game at www.magic-play.eu

You can get this game at www.magic-play.eu

9-3-8 BACKUP DATA CLEAR

Delete various game data.

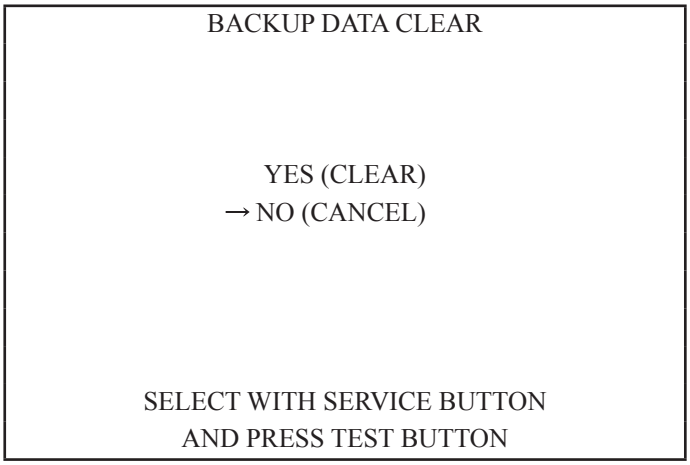

BACKUP DATA CLEAR screen (1/2)

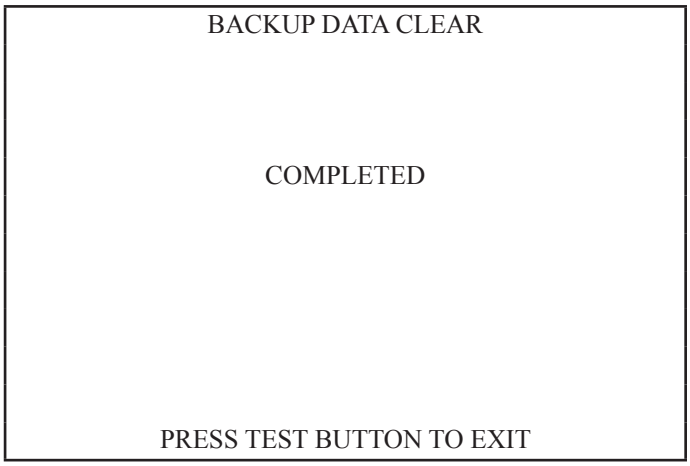

BACKUP DATA CLEAR screen (2/2)

■Controls

- Press the SERVICE Button to select menu item.

- Selecting YES (CLEAR) and pressing the TEST Button will clear all data, and “COMPLETED” will be displayed. At this point, press the TEST Button to return to the GAME TEST MENU screen.

You can get this game at www.magic-play.eu

You can get this game at www.magic-play.eu

9-4 SYSTEM INFORMATION

The SYSTEM INFORMATION screen displays system information.
The following information is displayed on this screen.

SYSTEM INFORMATION 1/2

The SYSTEM INFORMATION 1/2 screen displays system information.

■ **SYSTEM INFORMATION 1/2 Screen**

```
                SYSTEM INFORMATION 1/2

    KEYCHIP
    KEYCHIP ID          A72*-**********
    MODEL TYPE          *
    REGION              ***
    MOTHER BOARD
    MAIN ID             ****-**********
    OS VERSION          *******
    REGION              **
    MEMORY SIZE         *****MB
    STORAGE DEVICE
    STORAGE SIZE        *GB
    GRAPHIC DEVICE
    DEVICE ID           ****:****

                PRESS TEST BUTTON TO NEXT
```

The following information is displayed on this screen.

● KEYCHIP

KEYCHIP ID	The serial number of the key chip.
MODEL TYPE	The model type.
REGION	The region setting of the key chip.

● MOTHER BOARD

MAIN ID	The serial number of the game board.
OS VERSION	The system's OS version.
REGION	The region setting of the game board.
MEMORY SIZE	The onboard memory size.

● STORAGE DEVICE

STORAGE SIZE	The total capacity of the program installer device.

● GRAPHIC DEVICE

DEVICE ID	The graphic device's ID.

Press the TEST Button to move to the SYSTEM INFORMATION 2/2.

You can get this game at www.magic-play.eu

You can get this game at www.magic-play.eu

SYSTEM INFORMATION 2/2

The SYSTEM INFORMATION 2/2 screen displays system information.
Press the TEST Button on the SYSTEM INFORMATION 2/2 screen to return to the SYSTEM TEST MODE screen.

■ SYSTEM INFORMATION 2/2 Screen

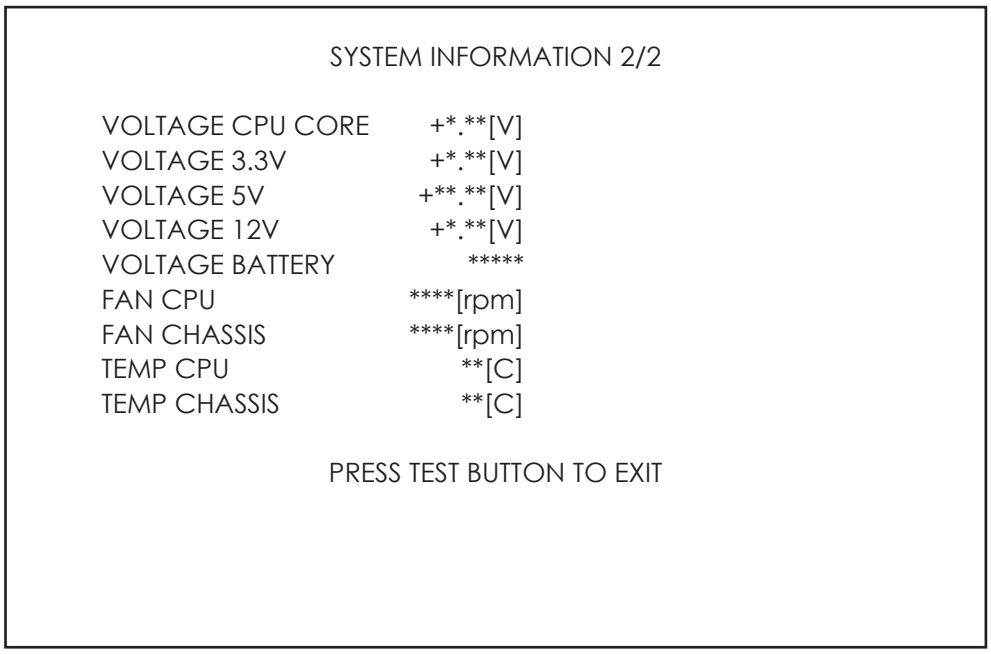

The following information is displayed on this screen.

VOLTAGE CPU CORE	CPU core voltage
VOLTAGE 3.3V	3.3 V voltage
VOLTAGE 5V	5 V voltage
VOLTAGE 12V	12 V voltage
VOLTAGE BATTERY	Backup battery status
FAN CPU	CPU fan RPM
FAN CHASSIS	Case fan RPM
TEMP CPU	CPU temperature
TEMP CHASSIS	Case temperature

Press the TEST Button to return to the SYSTEM TEST MODE screen.

You can get this game at www.magic-play.eu

You can get this game at www.magic-play.eu

9-5 STORAGE INFORMATION

The STORAGE INFORMATION screen displays information on the game stored in the program installer device.
This screen is also used when uninstalling the game stored within the program installer device.

Until preparations to launch the game are complete, a now checking screen will be displayed and uninstall cannot be performed.
If the program installer device does not contain any game data, “GAME PROGRAM NOT READY” screen will be displayed and uninstall cannot be performed.

NOTE: If an uninstall is performed, an install will then have to performed before the game board can be used again. Do not needless perform an uninstall.

■ STORAGE INFORMATION Screen

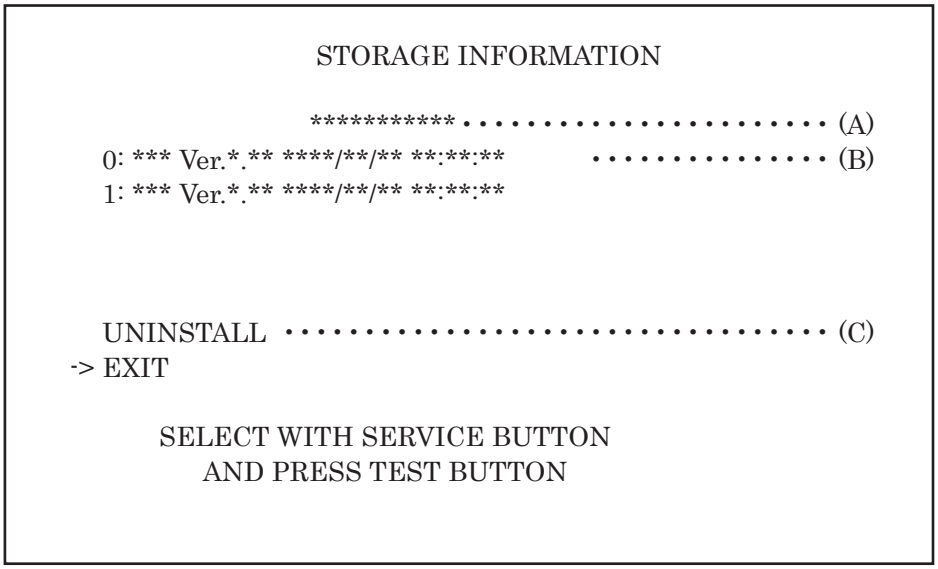

The following information is displayed on this screen.

(A) GAME TITLE

(B) INSTALLED GAME PROGRAM LIST

- GAME ID
- VERSION
- DATE & TIME OF RELEASE

(C) UNINSTALL

When preparations to launch the game are complete, it is possible to uninstall the game stored in the program installer device. Select UNINSTALL and then select “YES” to uninstall all game programs stored in the program installer device. Performing this operation will also mean that GAME TEST MODE will disappear from the SYSTEM TEST MODE screen.

Move the cursor to EXIT and press the TEST Button to return to the SYSTEM TEST MODE screen.

You can get this game at www.magic-play.eu

You can get this game at www.magic-play.eu

9-6 JVS TEST

The JVS TEST screen displays information on the connected JVS I/O boards.
Select INPUT TEST to display input data for the currently displayed JVS I/O board.
Select NODE to display information on the next NODE.
If no JVS I/O boards are connected, the message “NO JVS NODE” will be displayed.

■ JVS TEST Screen

```
                        JVS TEST

    INPUT TEST
    NODE                1/*
-> EXIT
    NAME                SEGA ENTERPRISES,LTD.:
                        I/O BD JVS :837-13551:
                        Ver1.00
    CMD VER             1.1
    JVS VER             2.0
    COM VER             1.0
    SWITCH              2 PLAYER(S) 13 BIT[S]
    COIN                2 SLOT(S)
    ANALOG              8 CH
    ROTARY              0 CH
    KEYCODE             0
    SCREEN              X:0 Y:0 CH:0
    GENERAL IN          0 BIT(S)
    CARD                0 SLOT(S)
    HOPPER OUT          0 CH
    DRIVER OUT          6 CH
    ANALOG OUT          0 CH
    CHARACTER           CHARA:0 LINE:0
    BACKUP              0

              SELECT WITH SERVICE BUTTON
                AND PRESS TEST BUTTON
```

NOTE: The screen display will vary depending on the I/O board that is connected.
The figure above is one example.

You can get this game at www.magic-play.eu

You can get this game at www.magic-play.eu

The following information is displayed on this screen.

NODE	The currently displayed JVS I/O board number and the total number of connected JVS I/O boards
NAME	Name of the connected I/O board, etc.
CMD VER	Command format version
JVS VER	JVS standard version
COM VER	Communication version
SWITCH	Number of players and number of 1P switches
COIN	Number of coin slots
ANALOG	Number of analog channels
ROTARY	Number of rotary encoders
KEYCODE	Keycode input active/inactive
SCREEN	Screen position input (X axis, Y axis, number of channels)
GENERAL IN	Number of standard switches
CARD	Number of card slots
HOPPER OUT	Number of hoppers
DRIVER OUT	Number of standard output drivers
ANALOG OUT	Number of analog output channels
CHARACTER	Number of characters/lines displayed
BACKUP	Backup present/absent

Move the cursor to EXIT and press the TEST Button to return to the SYSTEM TEST MODE screen.

You can get this game at www.magic-play.eu

You can get this game at www.magic-play.eu

JVS INPUT TEST

Use the JVS INPUT TEST to test the JVS input.
The hexadecimal input information from the JVS I/O board will be displayed in real time.

■ JVS INPUT TEST Screen

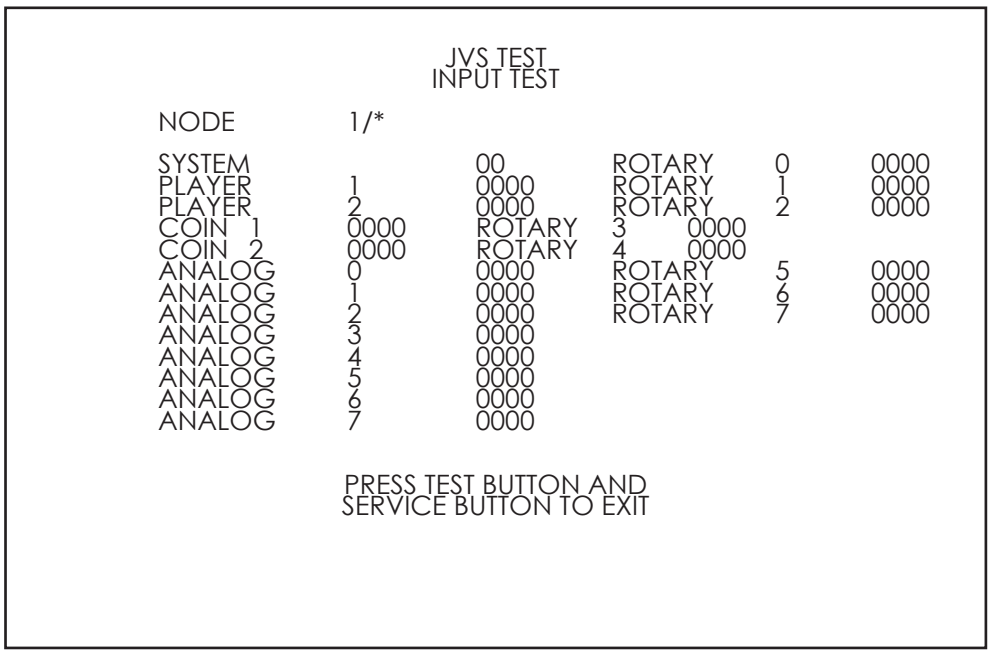

NOTE: The screen display will vary depending on the I/O board that is connected.
The figure above is one example.

The following information is displayed on this screen.

SYSTEM	System switch input data
PLAYER	Player number and player switch input data
COIN	Slot number and coin input data
ANALOG	Channel number and analog input data
ROTARY	Rotary number and rotary input data

Press the SERVICE and TEST Buttons simultaneously to return to the JVS TEST screen.

You can get this game at www.magic-play.eu

You can get this game at www.magic-play.eu

9-7 MONITOR TEST

Use MONITOR TEST to check the output of the monitor.
Enter MONITOR TEST and the MONITOR TEST 1/2 Screen will be displayed.

■ **MONITOR TEST Screen 1/2**

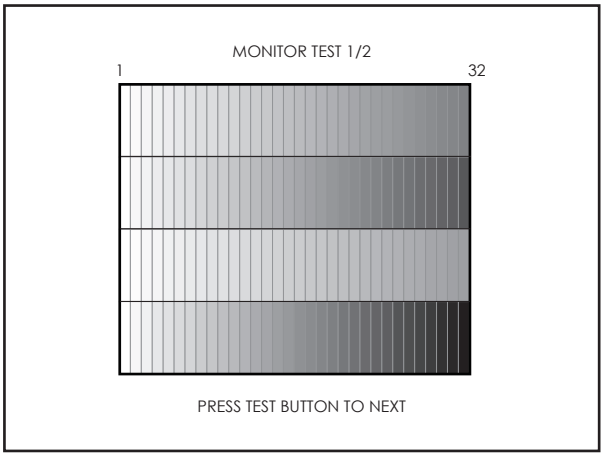

Press TEST Button and the screen will change to the MONITOR TEST 2/2 Screen.

■ **MONITOR TEST Screen 2/2**

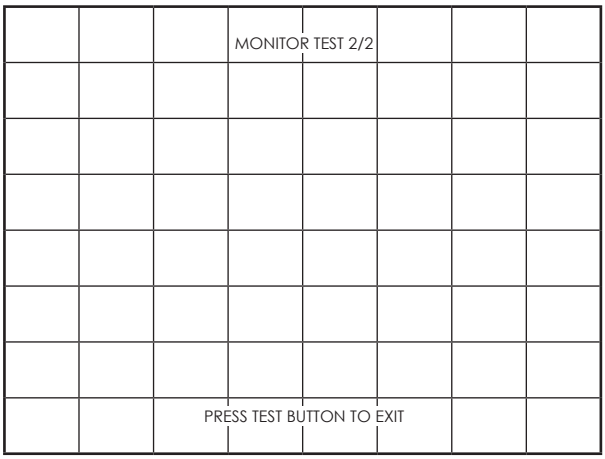

Press the TEST Button to return to the SYSTEM TEST MODE screen.

You can get this game at www.magic-play.eu

You can get this game at www.magic-play.eu

9-8 SPEAKER TEST

Use SPEAKER TEST to check the output of each speaker by having them each emit a test sound.

Select each speaker with the cursor and press the TEST Button to turn that speaker ON or OFF.
When set to ON a test sound will be emitted from that speaker.
It is possible to set multiple speakers to emit the test sound at the same time.
Depending on the cabinet used, some items will be displayed but no sound will be emitted.

■ **SPEAKER TEST Screen**

SPEAKER TEST

LEFT SPEAKER	OFF
RIGHT SPEAKER	OFF
REAR LEFT SPEAKER	OFF
REAR RIGHT SPEAKER	OFF
CENTER SPEAKER	OFF
WOOFER SPEAKER	OFF

-> EXIT

SELECT WITH SERVICE BUTTON
AND PRESS TEST BUTTON

Move the cursor to EXIT and press the TEST Button to return to the SYSTEM TEST MODE screen.

You can get this game at www.magic-play.eu

You can get this game at www.magic-play.eu

9-9 COIN ASSIGNMENTS

Use COIN ASSIGNMENTS to alter the credit settings.
The game will award players the number of credits determined here.
Settings will only be saved if they have been changed.

■ COIN ASSIGNMENTS Screen

```
                COIN ASSIGNMENTS

     COIN CHUTE TYPE  COMMON •••••••••••••••••••••• (A)
     SERVICE TYPE     COMMON •••••••••••••••••••••• (B)
     COIN CHUTE #1 COIN TO CREDIT RATE •••••••••••••• (C-1)
       1 COIN(S) COUNT AS 1 CREDIT(S)
     COIN CHUTE #2 COIN TO CREDIT RATE •••••••••••••• (C-2)
       1 COIN(S) COUNT AS 1 CREDIT(S)
     DETAIL SETTING •••••••••••••••••••••••••••••••• (D)
     GAME COST SETTING ••••••••••••••••••••••••••••• (H)
-> EXIT ••••••••••••••••••••••••••••••••••••••••••• (I)


          SELECT WITH SERVICE BUTTON
            AND PRESS TEST BUTTON
```

[COIN CHUTE TYPE: COMMON]

The following information is displayed on this screen.

(A) COIN CHUTE TYPE

COMMON	Allow all credits to be used by all players.
INDIVIDUAL	Treat each player's credits individually.

(B) SERVICE TYPE (Service Button Type)

COMMON	When the COIN CHUTE TYPE is set to COMMON, the number of credits available to all players will increase by 1.
	When the COIN CHUTE TYPE is set to INDIVIDUAL, each player's credits will increase by 1.
INDIVIDUAL	When the COIN CHUTE TYPE is set to COMMON, the number of credits available to all players will increase by 1.
	When the COIN CHUTE TYPE is set to INDIVIDUAL, the player corresponding to the SERVICE Button's credits will increase by 1.

You can get this game at www.magic-play.eu

You can get this game at www.magic-play.eu

(C-1) COIN CHUTE #1 COIN TO CREDIT RATE (Coin and credit conversion rate 1)

1 COIN(S) COUNT AS 1 CREDIT(S)	1 coin counts as 1 credit
2 COIN(S) COUNT AS 1 CREDIT(S)	2 coins count as 1 credit
3 COIN(S) COUNT AS 1 CREDIT(S)	3 coins count as 1 credit
4 COIN(S) COUNT AS 1 CREDIT(S)	4 coins count as 1 credit
5 COIN(S) COUNT AS 1 CREDIT(S)	5 coins count as 1 credit
1 COIN(S) COUNT AS 2 CREDIT(S)	1 coin counts as 2 credits
1 COIN(S) COUNT AS 3 CREDIT(S)	1 coin counts as 3 credits
1 COIN(S) COUNT AS 4 CREDIT(S)	1 coin counts as 4 credits
1 COIN(S) COUNT AS 5 CREDIT(S)	1 coin counts as 5 credits
FREE PLAY	Free play (no coins required)
DETAIL SETTING	More detailed settings

(C-2) COIN CHUTE #2 COIN TO CREDIT RATE (Coin and credit conversion rate 2)

When (A) COIN CHUTE TYPE is set to "COMMON," the detail settings for this item are restricted to the settings listed in (C-1).

(D) DETAIL SETTING

The COIN ASSIGNMENTS DETAIL SETTING screen allows more detailed settings that cannot be performed on (C) the COIN TO CREDIT RATE screen to be performed.

■ **DETAIL SETTING Screen**

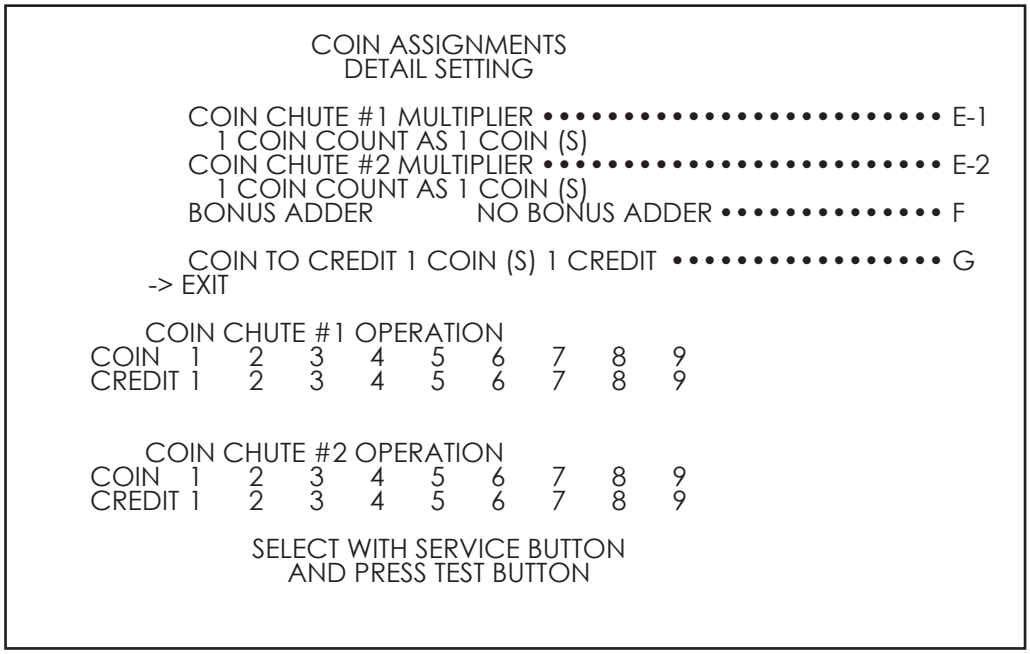

[COIN CHUTE TYPE: COMMON]

You can get this game at www.magic-play.eu

You can get this game at www.magic-play.eu

The following information is displayed on this screen.

(E-1) COIN CHUTE #1 MULTIPLIER

Coin conversion rate for #1. (How many coins 1 inserted coin counts for)

(E-2) COIN CHUTE #2 MULTIPLIER

Coin conversion rate for #2. (How many coins 1 inserted coin counts for)

NOTE: When (A) COIN CHUTE TYPE is set to "COMMON," COIN CHUTE #1 and COIN CHUTE #2 can be set separately.

(F) BONUS ADDER

Use of a bonus coin.

NO BONUS ADDER	No bonus coin given
2 COINS GIVE 1 EXTRA COIN	2 coins inserted successively award 1 bonus coin
3 COINS GIVE 1 EXTRA COIN	3 coins inserted successively award 1 bonus coin
4 COINS GIVE 1 EXTRA COIN	4 coins inserted successively award 1 bonus coin
5 COINS GIVE 1 EXTRA COIN	5 coins inserted successively award 1 bonus coin
6 COINS GIVE 1 EXTRA COIN	6 coins inserted successively award 1 bonus coin
7 COINS GIVE 1 EXTRA COIN	7 coins inserted successively award 1 bonus coin
8 COINS GIVE 1 EXTRA COIN	8 coins inserted successively award 1 bonus coin
9 COINS GIVE 1 EXTRA COIN	9 coins inserted successively award 1 bonus coin

(G) COIN TO CREDIT

The number of coins to number of credits conversion rate.

Move the cursor to EXIT and press the TEST Button to return to the COIN ASSIGNMENTS screen.

You can get this game at www.magic-play.eu

You can get this game at www.magic-play.eu

(H) GAME COST SETTING

Use the COIN ASSIGNMENTS GAME COST SETTING screen to set the cost (number of required credits) that the game program will use to determine if there are enough credits to play the game.

A total of 8 game costs can be defined. The game cost is defined by the BOOT ID, and when the second boot recognizes the game, the game cost defined by the BOOT ID will be displayed.

If the game is not recognized, the default game cost will be displayed.

■ GAME COST SETTING Screen

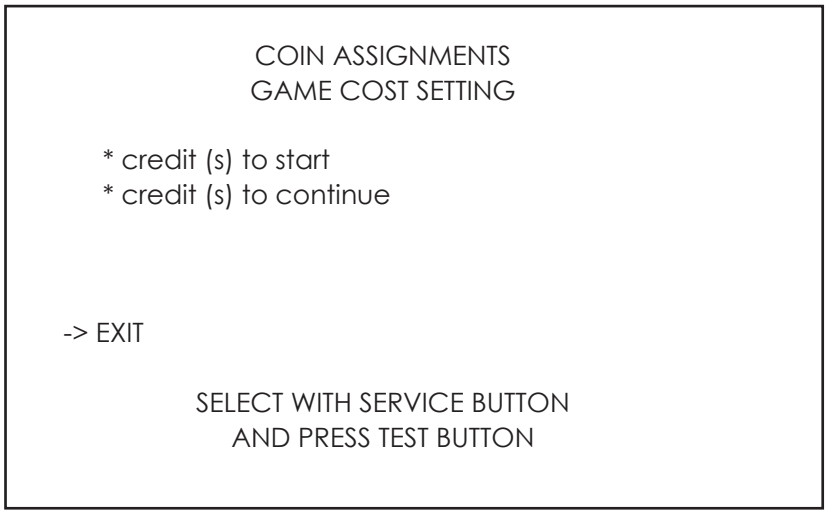

NOTE: The screen display will vary depending on the game that is installed. The figure above is one example.

Move the cursor to EXIT and press the TEST Button to return to the COIN ASSIGNMENTS screen.

(I) EXIT

Move the cursor to EXIT and press the TEST Button to return to the SYSTEM TEST MODE screen.

You can get this game at www.magic-play.eu

You can get this game at www.magic-play.eu

9-10 CLOCK SETTINGS

Use CLOCK SETTING to set the date and time.
Use the SERVICE Button to move the cursor to the category that you wish to change and press the TEST Button to increase that value. Holding the TEST Button down will make the value continuously increase.

■ **CLOCK SETTING Screen**

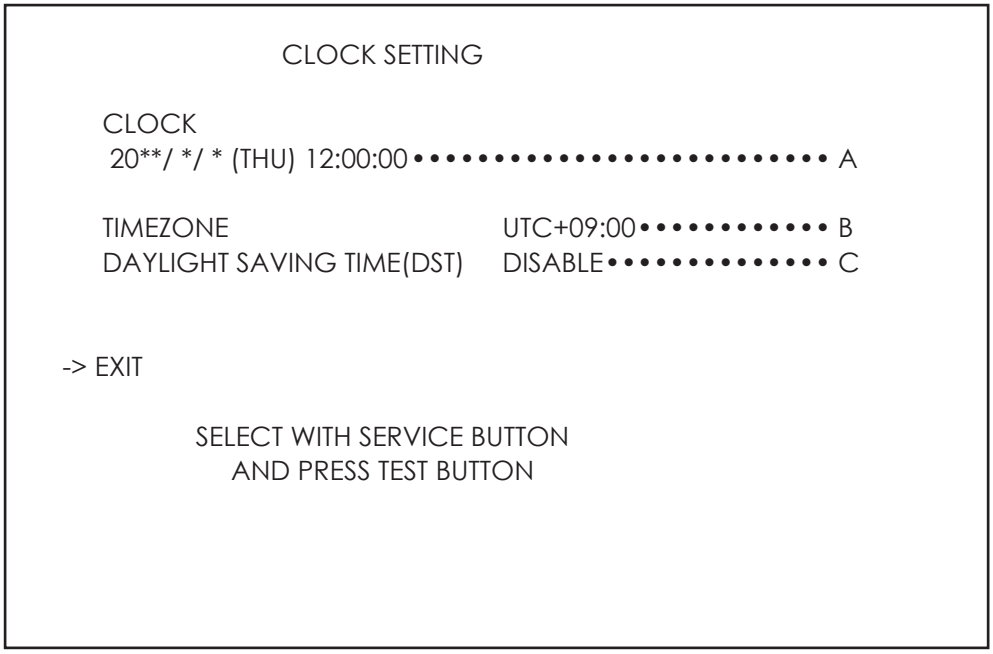

[DAYLIGHT SAVING TIME (DST): DISABLE]

(A) CLOCK

Displays the current time and date.
The time and date can be changed by selecting CLOCK.
Use the SERVICE Button to move the underline to the item you want to change and press the TEST Button to change the value.
If you select EXIT and press the TEST Button after changing the setting, you will be asked whether you really want to make the changes.
Select "YES" to change the value or "NO" to leave it as it is, and press the TEST Button.
Games connected to the network will adjust the time automatically.
Exercise caution as the game may become unplayable if the time is changed.

(B) TIMEZONE

Displays the time zone setting. If the machine is not available for ALL.Net, it is not displayed.

You can get this game at www.magic-play.eu

You can get this game at www.magic-play.eu

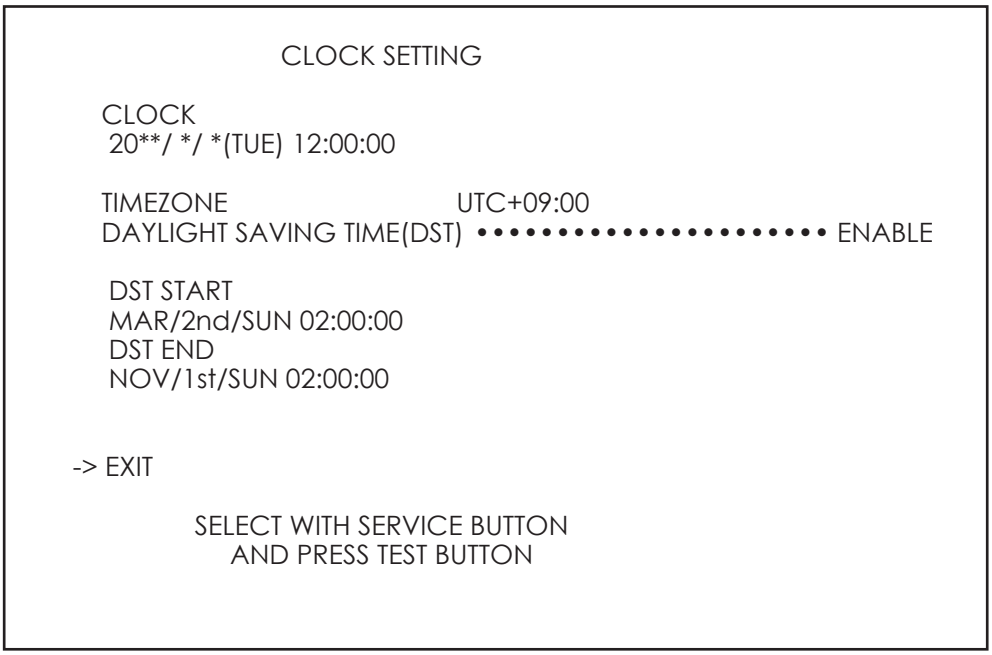

[DAYLIGHT SAVING TIME (DST): ENABLE]

(C) DAYLIGHT SAVING TIME (DST)

Displays the daylight saving time setting.

If set to ENABLE, you can specify when to start and end daylight saving time.

Move the cursor to EXIT and press the TEST Button to return to the SYSTEM TEST MODE screen.

You can get this game at www.magic-play.eu

You can get this game at www.magic-play.eu

9-11 NETWORK TEST

Use NETWORK SETTING to determine network settings or to test the network.
There is no need to alter these settings for a game that does not use a network.

■ **NETWORK SETTING (Setting Menu) Screen**

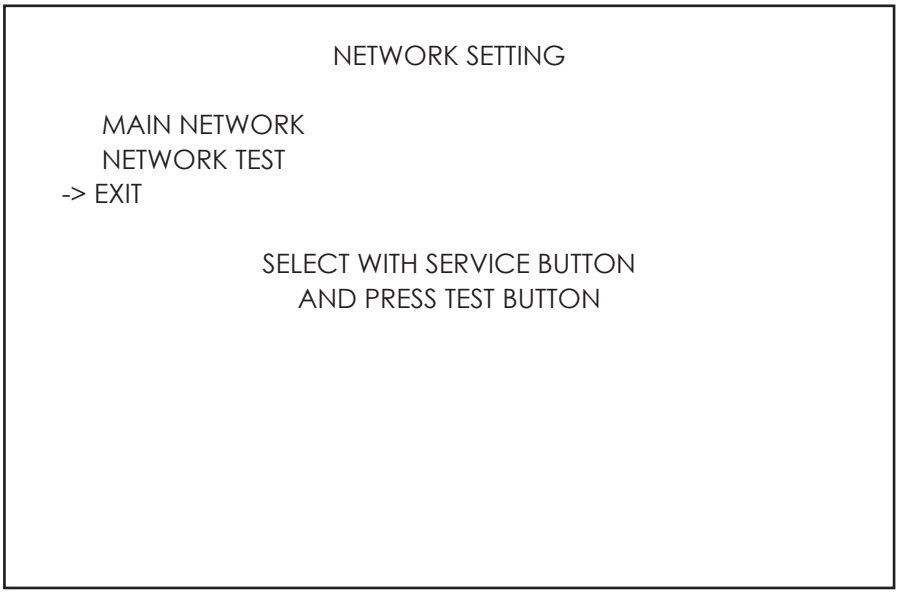

The following information is displayed on this screen.

MAIN NETWORK	Performs a network setting.
NETWORK TEST	Performs a network test.

Move the cursor to EXIT and press the TEST Button to return to the SYSTEM TEST MODE screen.

When using a hub for connecting a number of cabinets in a network, please change the IP addresses accordingly.

IP (192.168.88.XX) XX indicating the cabinet number. i.e. 192.168.88.**01** for cabinet 1. 192.168.88.**02** for cabinet 2 and so on up to a total of 8 cabinets.

IMPORTANT

- **Do not connect any other device into the same hub as the linked cabinet. Doing so will cause networking problems between cabinets**

You can get this game at www.magic-play.eu

You can get this game at www.magic-play.eu

MAIN NETWORK

Select MAIN NETWORK on the NETWORK SETTING (Setting Menu) and the following screen will be displayed.

■ **NETWORK SETTING (Network Setting) Screen**

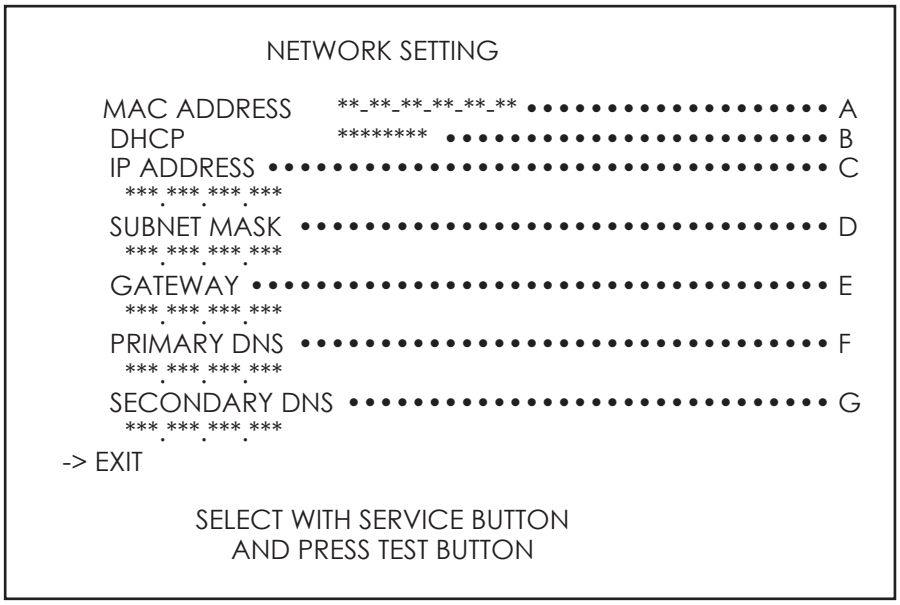

The following information is displayed on this screen.

(A) MAC ADDRESS
The individual ID number assigned to each device using the Ethernet.

(B) DHCP
Set automatic acquisition of network settings.
ENABLE: Acquire network settings automatically. (use when connected to a router)
DISABLE: Input network settings manually. (use when connected to a Hub and/or fixed IP address)

(C) IP ADDRESS
A setting required for the network.
After setting the numbers, select SET and press the TEST Button to save the setting.
When DHCP is set to ENABLE, this item cannot be selected.

(D) SUBNET MASK
A setting required for the network.
After setting the numbers, select SET and press the TEST Button to save the setting.
When DHCP is set to ENABLE, this item cannot be selected.

(E) GATEWAY
A setting required for the network. See the manual supplied with each game software for the correct setting.
After setting the numbers, select SET and press the TEST Button to save the setting.
When DHCP is set to ENABLE, this item cannot be selected.

(F) PRIMARY DNS
A setting required for the network. See the manual supplied with each game software for the correct setting.
After setting the numbers, select SET and press the TEST Button to save the setting.
When DHCP is set to ENABLE, this item cannot be selected.

(G) SECONDARY DNS
A setting required for the network. See the manual supplied with each game software for the correct setting.
After setting the numbers, select SET and press the TEST Button to save the setting.
When DHCP is set to ENABLE, this item cannot be selected.

Move the cursor to EXIT and press the TEST Button to return to the NETWORK SETTING (Setting Menu) screen.

You can get this game at www.magic-play.eu

You can get this game at www.magic-play.eu

NETWORK TEST

Check the network connection.
The test will begin as soon as this screen is displayed. The machine cannot be operated until the test is finished.

■ **NETWORK TEST Screen**

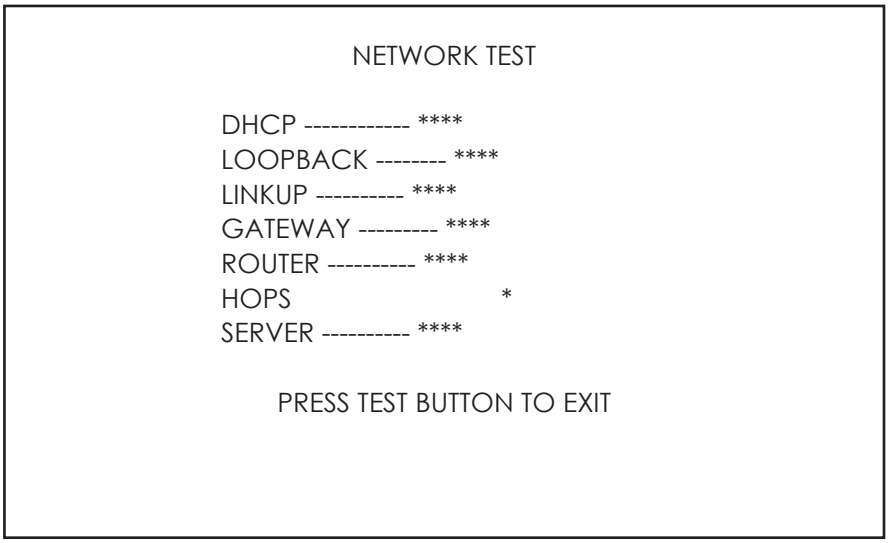

The following information is displayed on this screen.

DHCP	Status of communication settings acquisition when DHCP is set to ENABLE.
LOOPBACK	RINGWIDE network function operation status.
LINKUP	LAN cable connection status.
GATEWAY	Status of connection with title router, etc.
ROUTER	Status of connection with ALL.Net router.
HOPS	Number of router connections to ALL.Net router.
SERVER	Status of connection with ALL.Net server.

The status of determining items is as listed in the table below:

CHECK	Indicates that the item is currently being checked.
GOOD	Indicates that the item is functioning normally.
BAD	Indicates that the item is not functioning normally. (Damaged, incorrect settings, etc.)
N/A	Indicates that the item has not been checked. (Prerequisites have not been met, etc.)

Press the TEST Button to return to the NETWORK SETTING (Setting Menu) screen.

9-12 EXIT

Exit the Test Mode.

You can get this game at www.magic-play.eu

You can get this game at www.magic-play.eu

10 CONTROLLER UNIT(S)

⚠ WARNING

- Before starting to work, be sure to turn the power off. Working without turning the power off can cause an electric shock or short circuit.
- Be careful not to damage the cables. Damaged cables may cause electric shock or short circuit or present a risk of fire.
- Exercise due caution in performing soldering procedures. If soldering iron is handled carelessly, there could be fires or burns.

⚠ CAUTION

- When fastening plastic parts, be careful not to tighten screws and nuts excessively. Failure to observe this may damage the parts and cause injury due to fragments resulting from damage.
- After the unit has been disassembled and reassembled again, check carefully to be sure that there are no gaps or rattling at the junctions and that the trigger can be operated smoothly. If there are gaps or rattling, or if operation is not satisfactory, the players could get fingers or hands caught, resulting in injury.
- Be sure to inspect control unit surfaces for cracks and damage. Players could be injured if they play when the unit is cracked or damaged.
- Assemble so that there is no gap between the L and R covers. If there is a gap or rattling, the players could get fingers or hands caught, resulting in injury.

STOP IMPORTANT

- Do not cut the tie that holds the cables together inside the control unit. Doing so can lead to connection failures with the connectors inside the unit. If the tie must be cut to replace cables or perform other such work, make sure that they are returned to the original position and tied together again.
- Once the product has been disassembled, use slack preventive agent (product No.: 090-0012). Coat screws with suitable amounts of this agent and then tighten them. If this agent is not used, the product might start rattling or come apart.
- Use the slack preventive agent prescribed in these instructions. If any other agent is used, there could be chemical changes that inhibit the use of screws and part surfaces could be damaged.
- Be careful not to damage or lose small parts or screws.
- When a part has been replaced, be sure to always make adjustments and check conditions in TEST MODE.

You can get this game at www.magic-play.eu

You can get this game at www.magic-play.eu

If the control unit does not operate satisfactorily and adjustments in TEST MODE are ineffective, it could be that parts inside the control unit have been damaged. Follow the steps given below to remove the control unit, then take it apart and replace parts.

To replace parts in the control unit, remove the speaker unit and detach the L and R covers of the outer part. Because internal parts are inserted on the R cover side, work with the R cover facing downward.

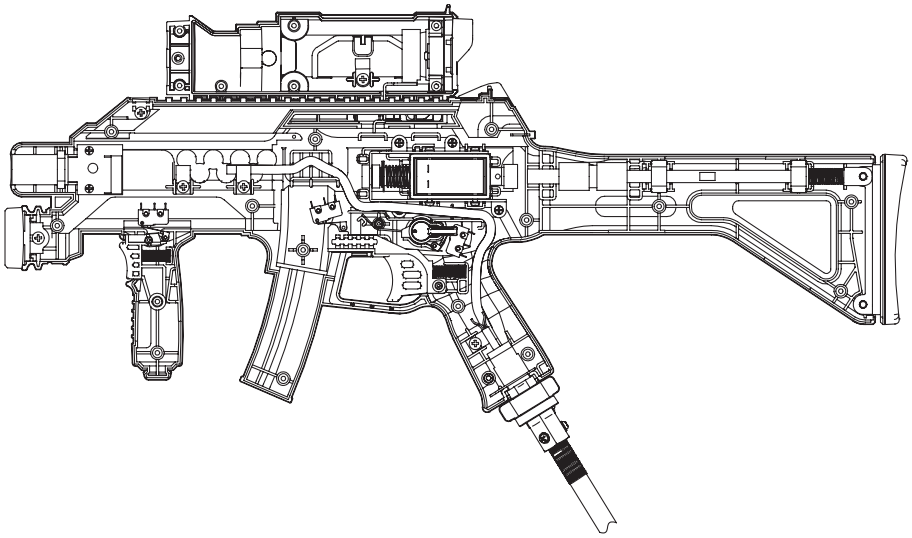

You can get this game at www.magic-play.eu

You can get this game at www.magic-play.eu

10-1 REMOVING THE CONTROLLER UITS

Remove the 1P/2P control unit.

1 Turn the power off.

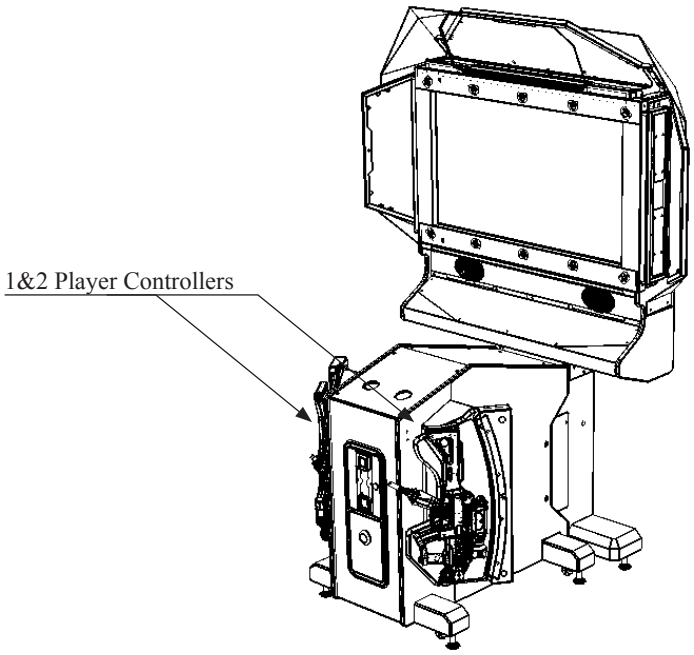

2 If operating as a condensed cabinet, the cabinet must be first extended (see chapter 2 on how to extend the cabinet) unscrew the M4x30 M SCR PH BLK (4) and remove the upper service panel. If the cabinet has been in operation as an extended cabinet then the M8x30 SOCKET BOLT (2) must also be removed to gain access.

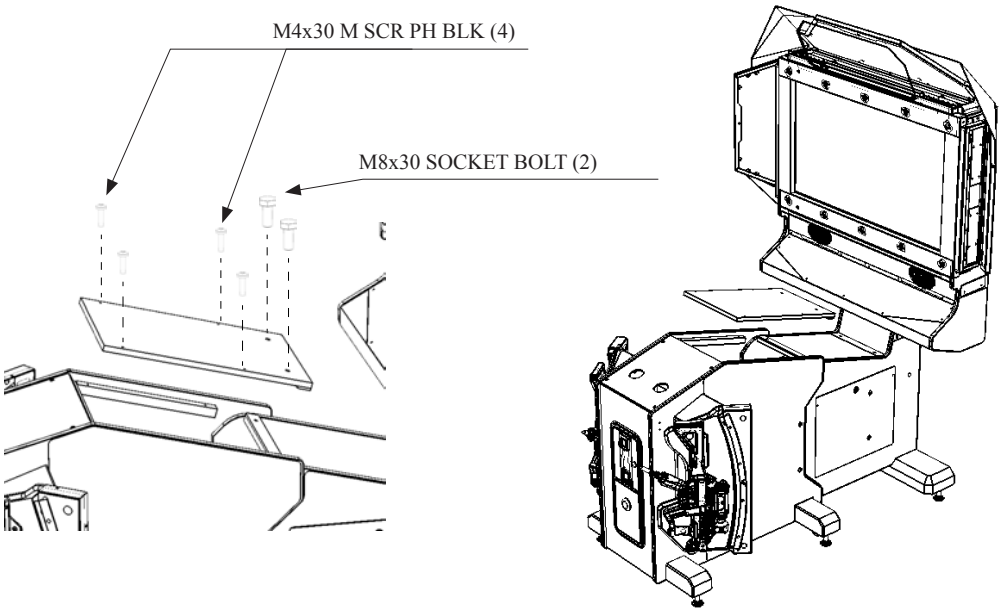

You can get this game at www.magic-play.eu

You can get this game at www.magic-play.eu

3 Locate the connectors for each of the controllers and disconnect.

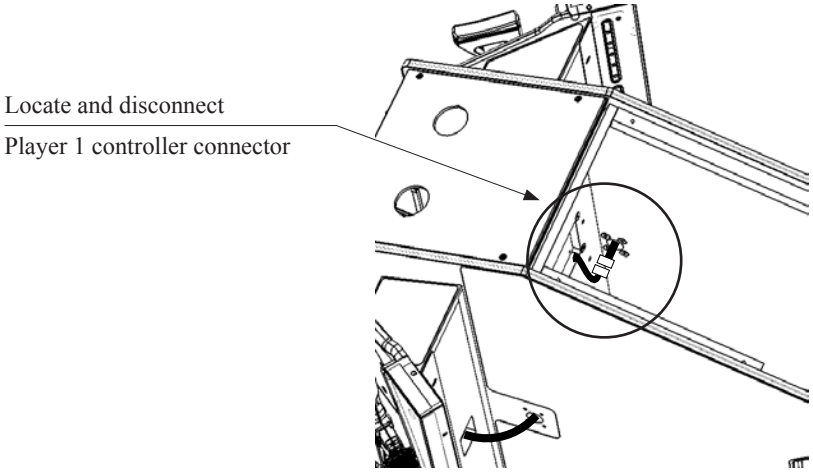

4 Remove the M4x16 M SCR TMP PRF CRM (4) from the cable housing at the side of the cabinet. Once removed carefully pull the connector through the access hole.

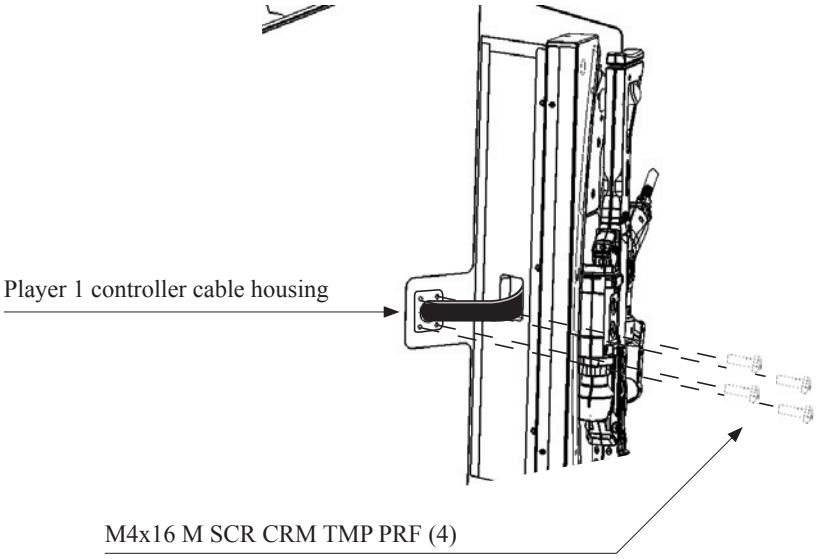

The controller can now be removed from the cabinet

You can get this game at www.magic-play.eu

You can get this game at www.magic-play.eu

10-2 REMOVING THE CONTROLLER SUPPORT

1 Refer to 10-1“REMOVING THE CONTROL UNIT “ and take off the control unit.

2 Using an Allen wrench, remove the 6 hexagon socket head screws, and take off the 4 controller supports.

NOTE: When reattaching reinforcement parts, always refer to the fiture to ensure that screws are not put into the wrong places. Also, regularly check that the screws have not loosened over time.

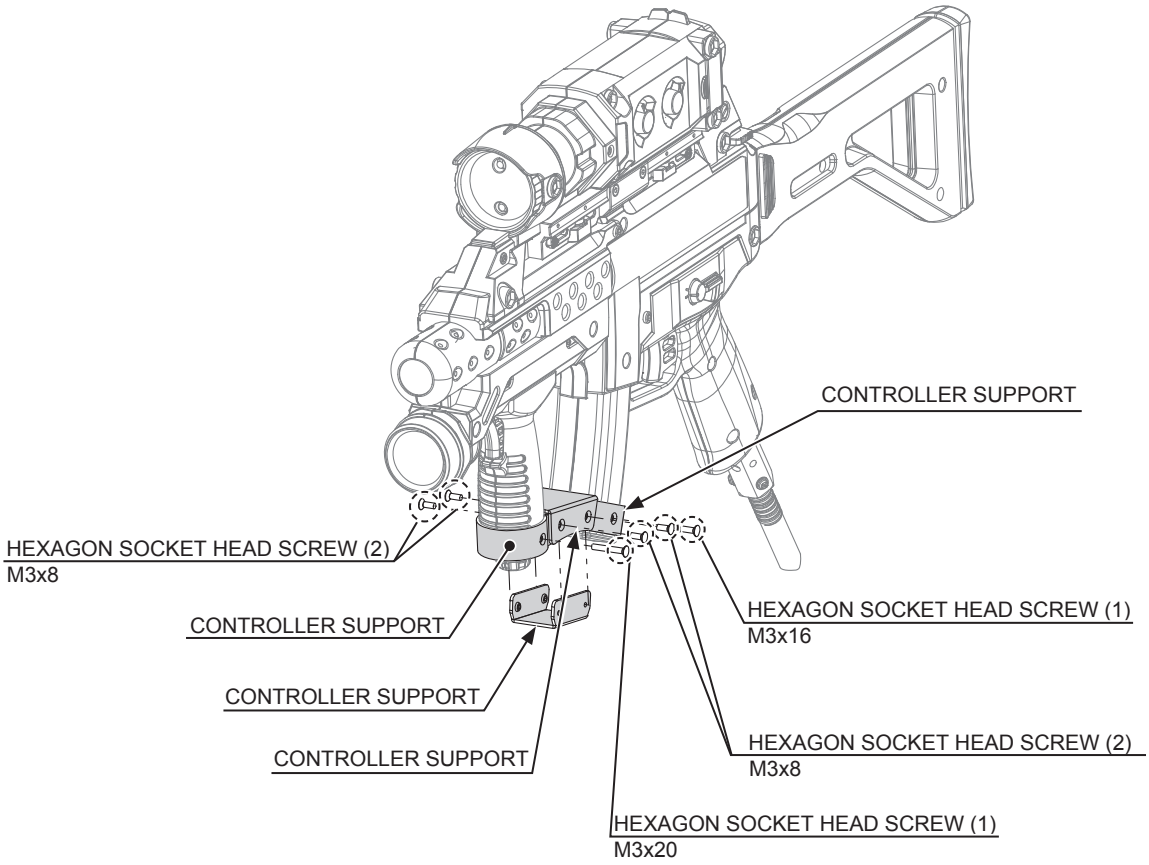

You can get this game at www.magic-play.eu

You can get this game at www.magic-play.eu

10-3 REMOVING THE SCOPE

1 Refer to 10-1 “REMOVING THE CONTROL UNIT ”and take off the control unit.

2 Remove the 2 screws and take off the lens cap.

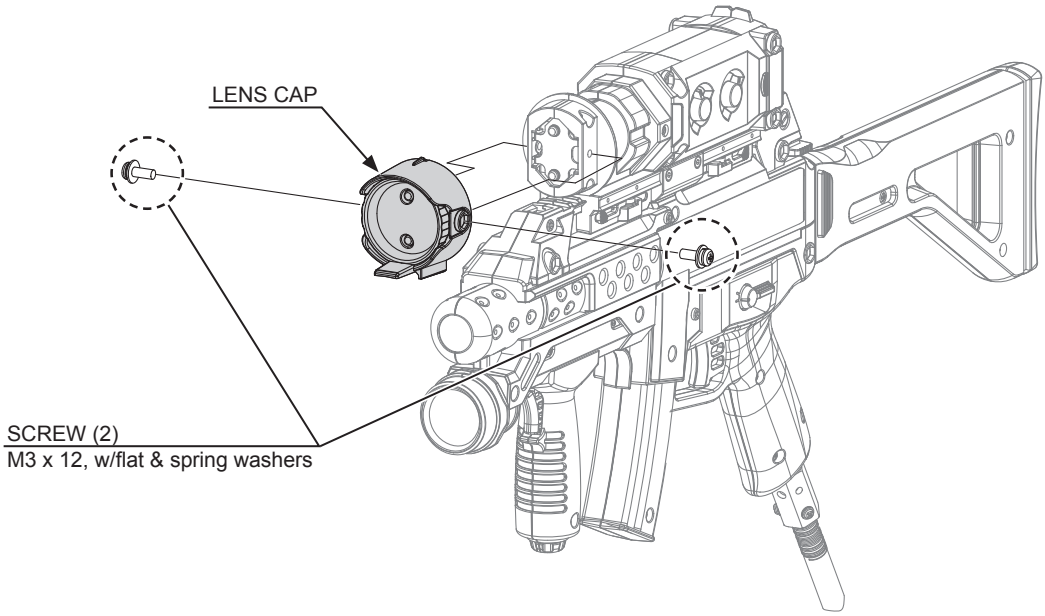

3 Remove the 7 screws and take off the scope body L.

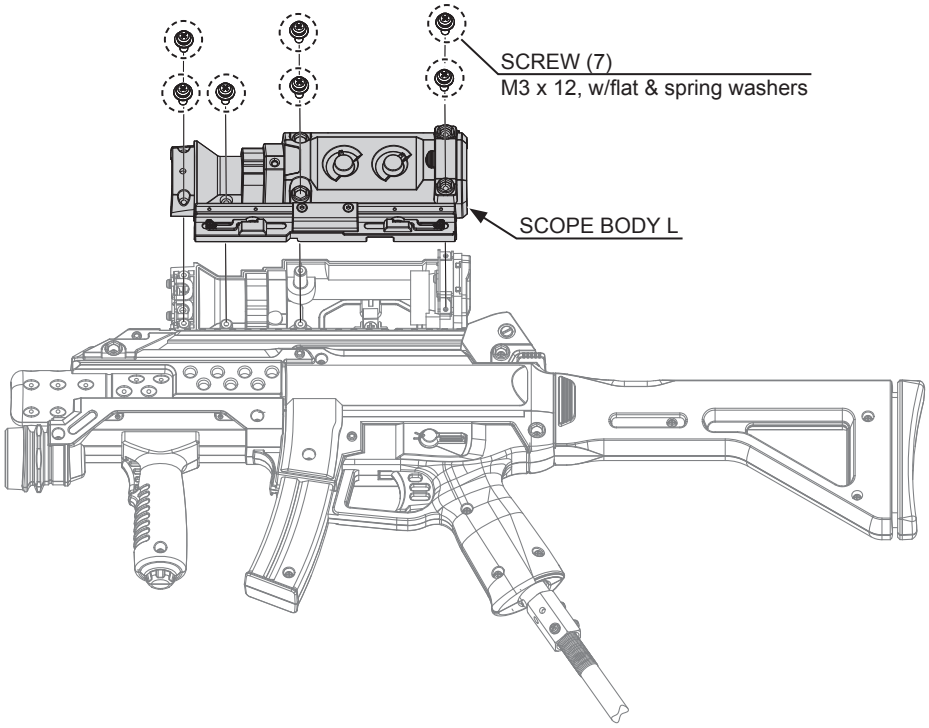

You can get this game at www.magic-play.eu

You can get this game at www.magic-play.eu

4 Remove the 1 screws and undo the 1 cord clamp.

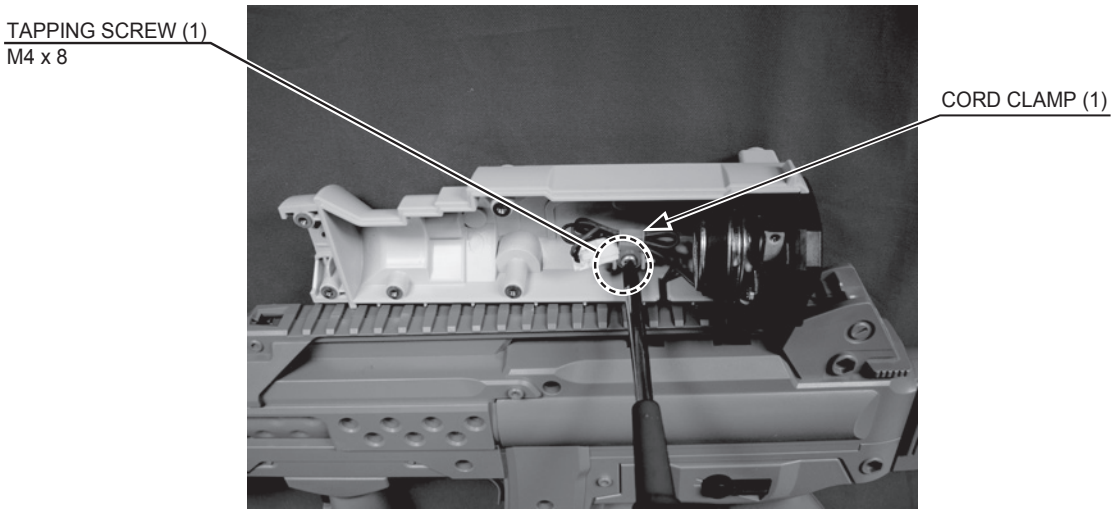

5 Disconnect the 1 connector.

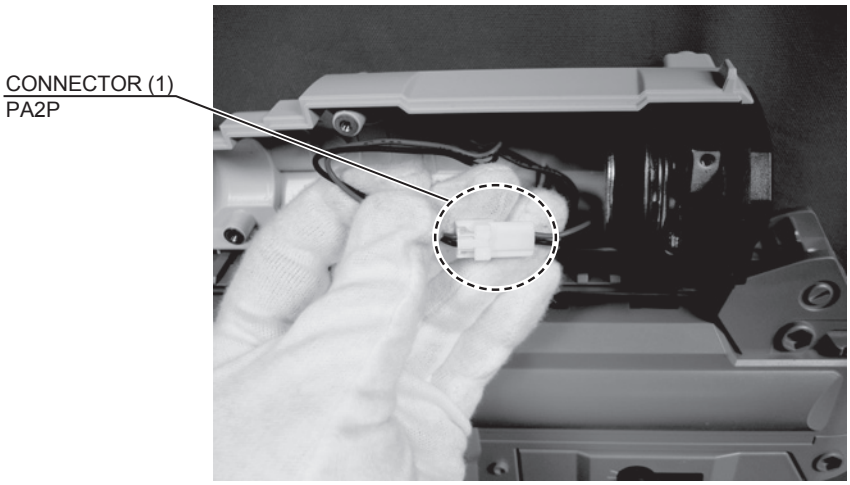

6 Remove the scope body R from the control unit. At this point, the speaker net and speaker come loose easily, so be careful not to lose them.

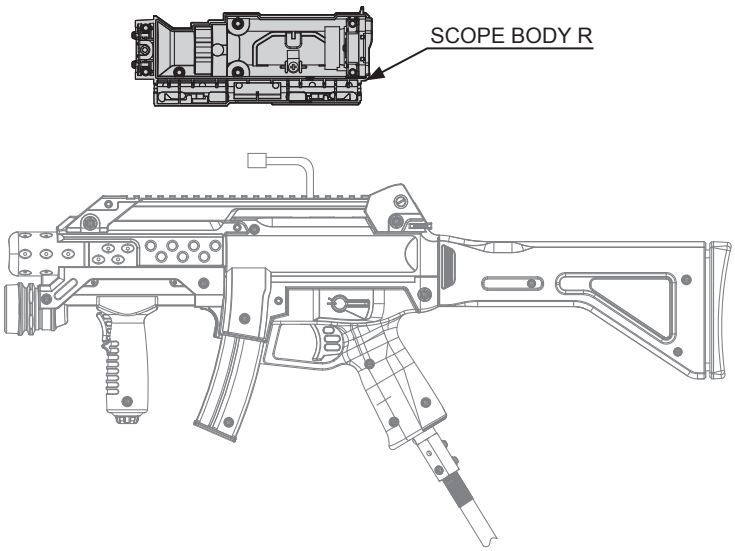

You can get this game at www.magic-play.eu

You can get this game at www.magic-play.eu

10-4 REMOVING THE MICROSWITCH

There are microswitches for the trigger and shot selector and action button inside the control unit.

1 Refer to 14-2 “REMOVING THE CONTROLLER SUPPORT ” and 14-3 “REMOVING THE SCOPE,” take off the controller support and scope body.

2 Place cover R face down on the work surface and remove the 15 screws to take off the cover L.

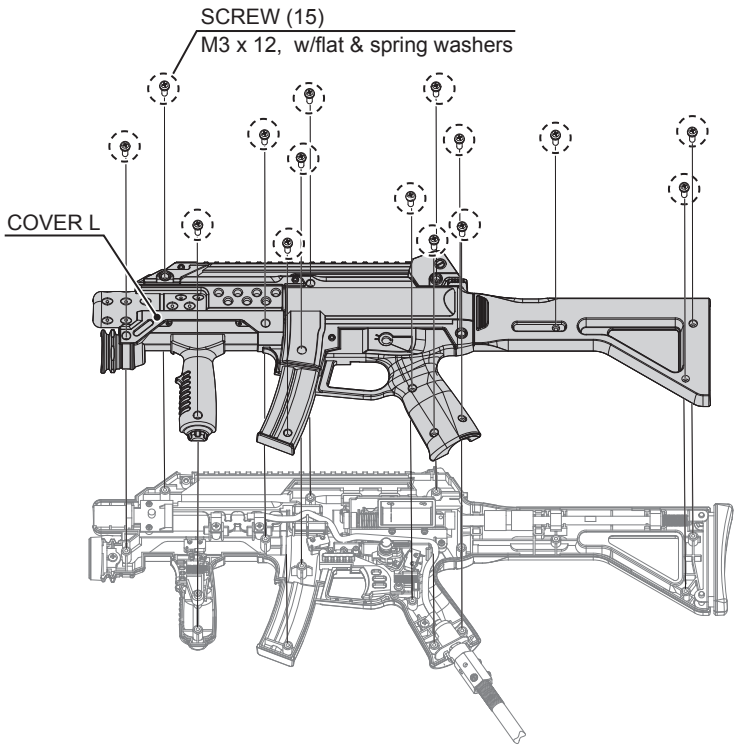

3 Remove the microswitch from the R cover.

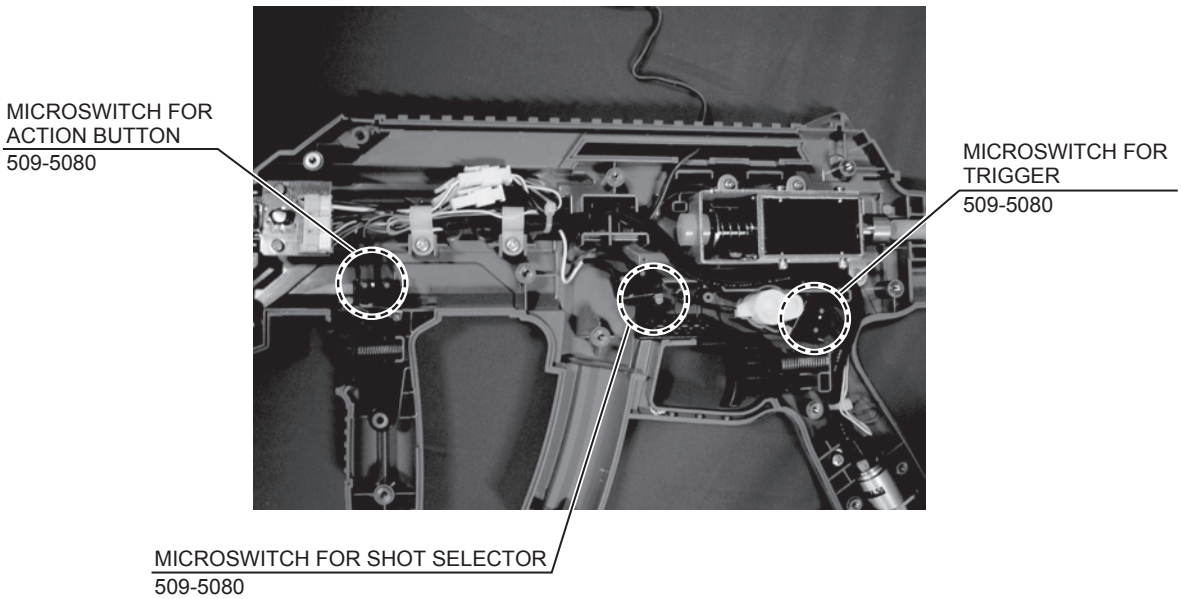

You can get this game at www.magic-play.eu

You can get this game at www.magic-play.eu

4 Remove the soldered part and then remove the microswitch.

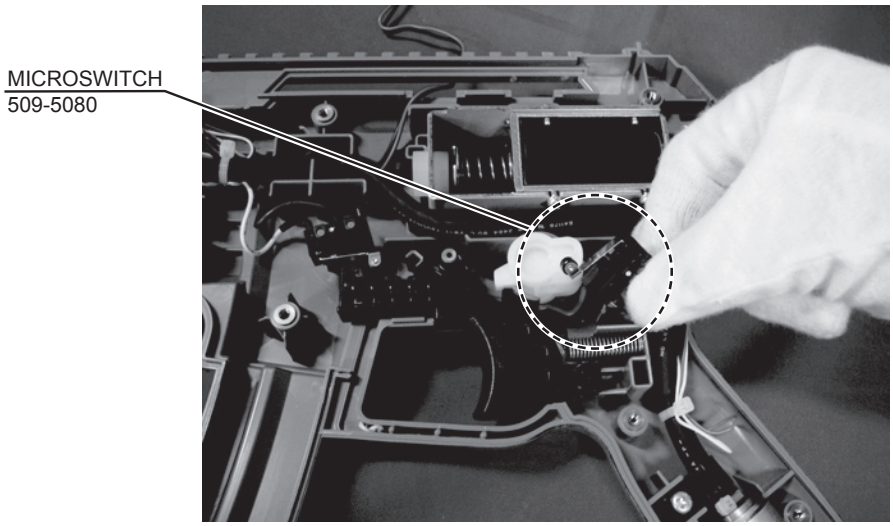

5 Solder and attach the new microswitch. Protect the soldered part with heat-shrinkable tubing.

6 Refer to Step 1 to 4 and work in reverse order to reassemble the control unit. Be careful not to tighten screws excessively.

7 Carry out an input test, controller adjustment and speaker test, and adjust the operation of each of the components.
(See chapter 9)

You can get this game at www.magic-play.eu

You can get this game at www.magic-play.eu

10-5 REPLACING THE SOLENOID

1 Refer to 14-2 “REMOVING THE CONTROLLER SUPORT” and 14-3 “ REMOVING THE SCOPE,” take off the controller support and scope body.

2 Refer to Step 2 of 14-4 “REPLACING THE MICROSWICH” and take off the cover L.

3 Disconnect the 1 connector.

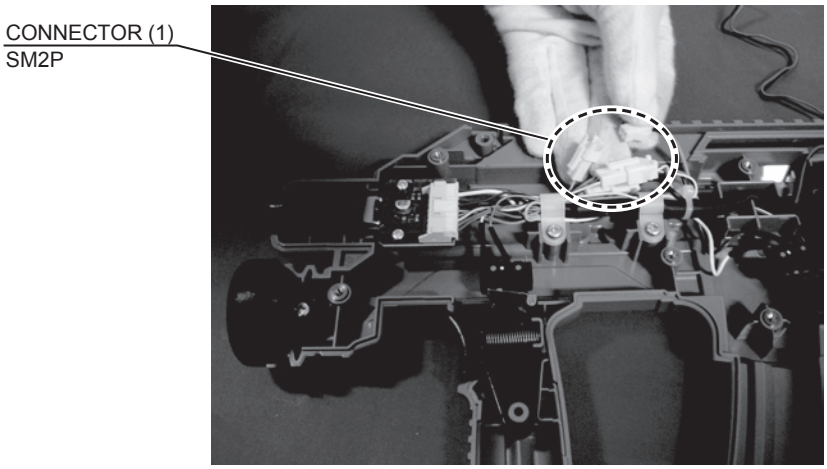

4 Remove the 4 screws and take off the solenoid. Be careful not lose the spring and other small parts.

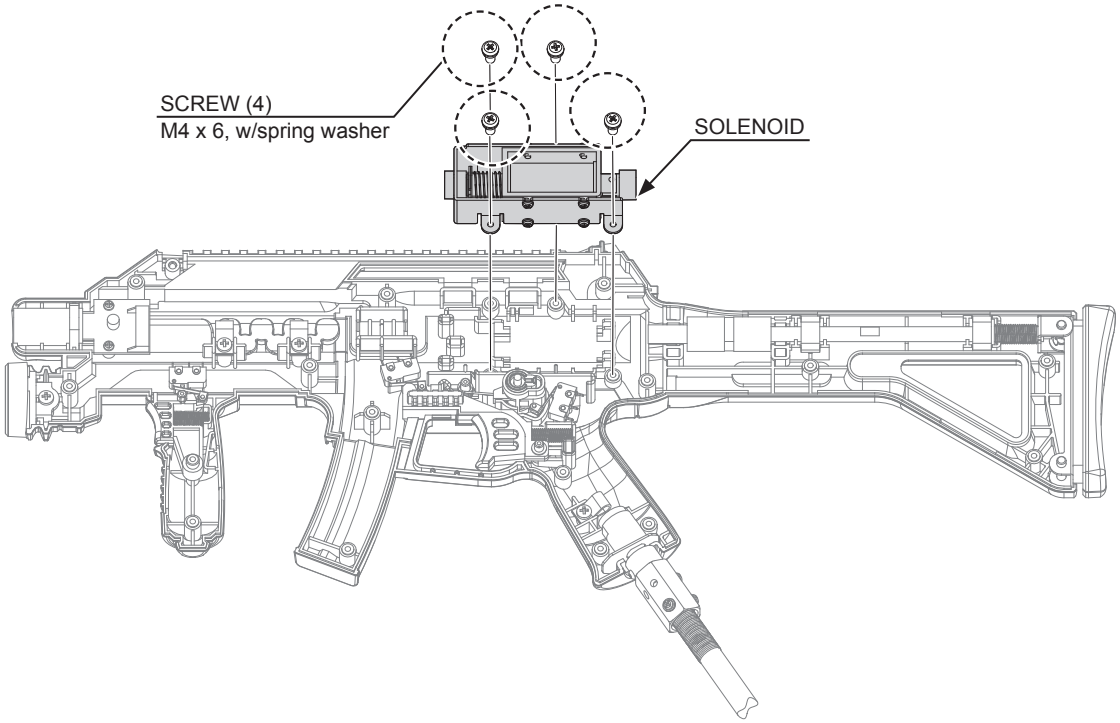

You can get this game at www.magic-play.eu

You can get this game at www.magic-play.eu

5 Remove the 8 screws and replace the solenoid.

NOTE: When attaching it, use a thread sealant.

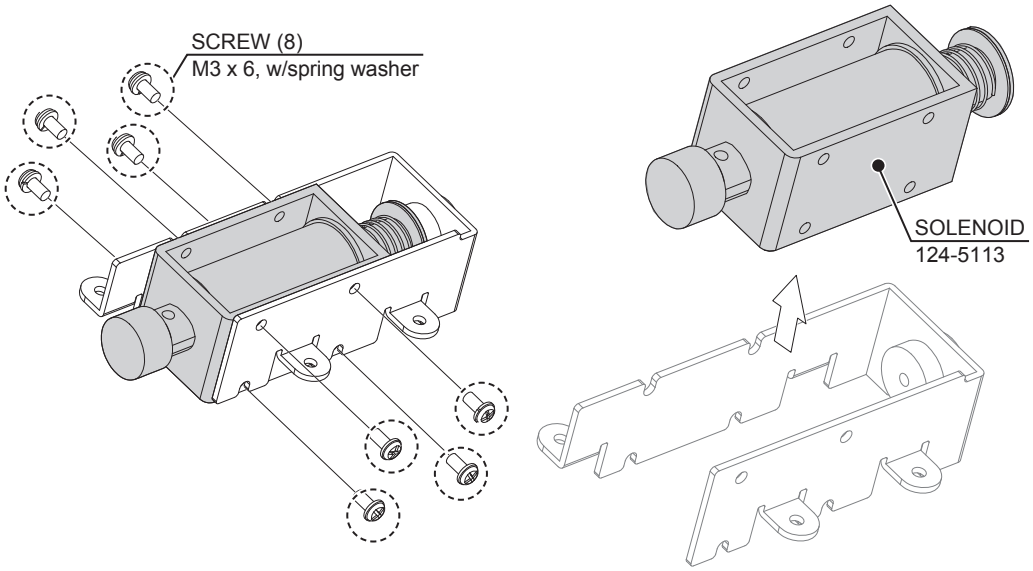

6 Refer to Step 1 to 5 and work in reverse order to reassemble the control unit. Refer to the figure and be careful with the order in which the small parts are attached and the direction the side with the solenoid cable faces. Attaching the parts the wrong way may result in malfunction of the unit or pinching of the cable. Be careful not to tighten screws excessively.

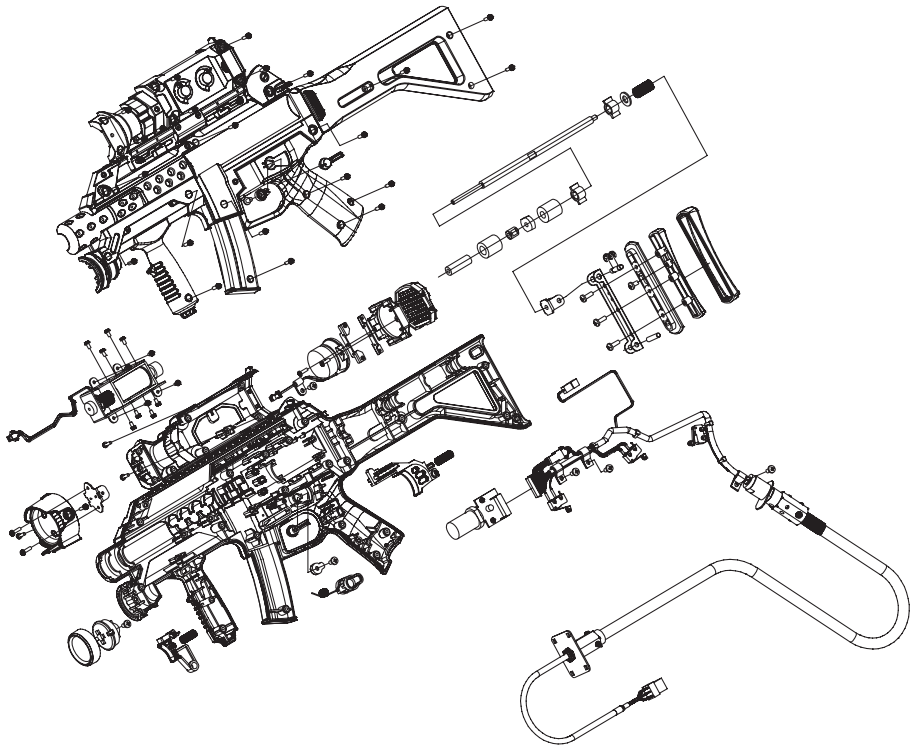

7 Carry out an input test, controller adjustment and speaker test, and adjust the operation of each of the components.(See chapter 9.)

You can get this game at www.magic-play.eu

You can get this game at www.magic-play.eu

11 GRAPHICS DISPLAY

11-1 PRECAUTIONS WHEN HANDLING THE LCD DISPLAY

⚠ WARNING

[Responding to breakdown or abnormality]

- **If you notice smoke or an odd smell, immediately unplug the power cable from the power plug. Continuing to use the product may cause a fire or an electric shock. After making sure the smoke has stopped, contact the point-of purchase.**
- **If nothing displays on the screen, immediately unplug the power cable from the power plug. Continuing to use the product may cause a fire or an electric shock. Contact the point-of-purchase and request an inspection.**
- **If water or foreign objects get inside the monitor, immediately unplug the power cable from the power plug. Continuing to use the product may cause a fire or electric shock. Contact the point-of-purchase and request an inspection.**
- **If the monitor is dropped or the cabinet is damaged, immediately unplug the power cable from the power plug. Continuing to use the product may cause fire or an electric shock. Contact the point-of-purchase and request an inspection.**

[During operation]

- **Do not attempt to repair, remodel, or disassemble the monitor. The monitor contains high-voltage parts and attempting the above actions may cause a fire or electric shock. Contact the point-of-purchase to request inspection, adjustment, or repair.**
- **Do not allow foreign objects to get inside the monitor. If metal or paper objects enter the monitor through the air vents, they may cause a fire, electric shock, or a short circuit.**

⚠ CAUTION

- **Do not tap or strike the surface of the LCD, as doing so may break the glass and cause injury. If the glass breaks and the liquid crystal leaks out, do not touch the liquid. The liquid can cause damage if it comes into contact with eyes or skin. aaShould the liquid crystal come into contact with eyes or skin, wash the affected area thoroughly with clean water and immediately consult a physician. If the liquid crystal comes into contact with clothing, immediately wash it off with clean water. If it comes into contact with any equipment other than this product, wipe it off without touching it directly.**
- **Make sure to perform appropriate adjustments. Do not operate the product when the screen is flickering, distorted, or experiencing other abnormalities. Images from an improperly adjusted screen could cause players and other customers to experience dizziness, headaches, and other ailments.**

You can get this game at www.magic-play.eu

You can get this game at www.magic-play.eu

11-2 CLEANING THE SCREEN SURFACE

⚠CAUTION

- Use a soft, dry cloth (flannel-type) to wipe away dirt. Do not use materials such as coarse mesh gauze.
- Alcohol (ethanol) is the recommended solvent for removing dirt. When using a cleaning agent, follow the precautions below.

- Dilute neutral cleaning agents for home use with water. Soak a soft cloth in the solution, and wring it thoroughly before wiping the screen.
- Do not use abrasive cleaning agents or powders, or cleaning agents containing bleach.
- Do not use alkaline cleaning agents such as glass cleaners, or solvents such as thinners.

- Do not scrub or scratch the screen surface with abrasive materials such as brushes or scrub brushes.

CLEAN THE SCREEN DAILY.

You can get this game at www.magic-play.eu

You can get this game at www.magic-play.eu

11-3 ADJUSTMENT METHOD

STOP IMPORTANT

All adjustment values are set accurately at the time of shipping from the factory. Do not readjust these values needlessly or apply adjustments not specified in this manual. The display may not appear properly if the values are incorrect.

CONTROL - ADJUSTMENT PROCEDURE

This sections explains basic control procedures for making adjustments using the buttons on the 'Monitor Adjustment Board'

This Adjustment Board, and then Monitor Power Supply are located behind the Rear Door.

STOP IMPORTANT

Procedures herein are to be carried out by site maintenance personnel or other qualified professionals,work should not be carried out by personnel without the necessary skill or technology. Work carried out by unqualified persons may cause serious accidents, including electrocution.

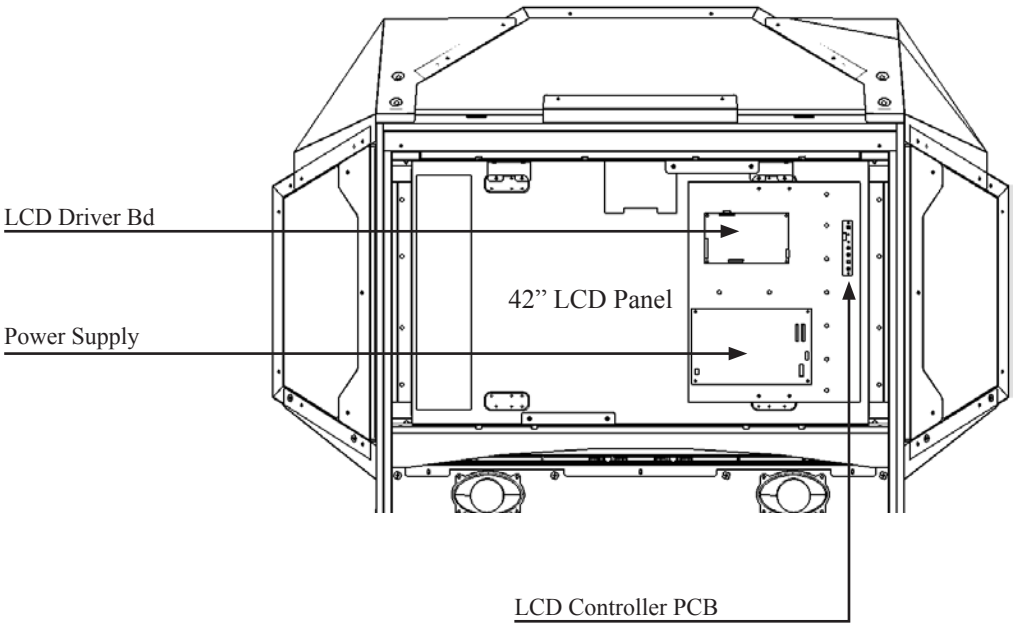

You can get this game at www.magic-play.eu

You can get this game at www.magic-play.eu

11-3 ADJUSTMENT METHOD

Button Names and Functions

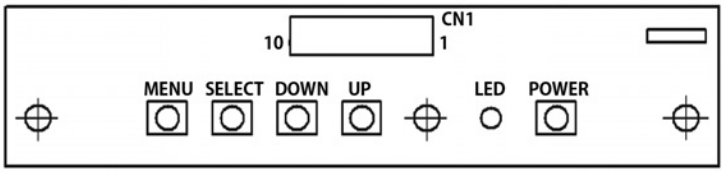

11-3 Fig. 03

MENU: Turn the Picture Menu display ON and OFF.

SELECT: Gains entry to the Item selected in the menu. (Highlights in Yellow when selected) Exits the Item adustment. Any changes made during this operation are actioned.

DOWN: Moves the cursor (Black Bar) down to select a menu item.
Decrease the value of, or change, a selected menu item.

UP: Move the cursor (Black Bar) up to select a menu item.
Increase the value of, or change, a selected menu item.

LED: LED illuminates green: Monitor is operating.
LED flashes red: Power is off.

POWER: Turns the LCD Display ON and OFF. (Usually, it's not necessary to operate.)

You can get this game at www.magic-play.eu

You can get this game at www.magic-play.eu

11-3 ADJUSTMENT METHOD

On-Screen Display (OSD)

Press the MENU Button while the OSD is not displayed to bring up the Picture Menu.
On the Picture Menu, it is possible to perform various screen adjustments.

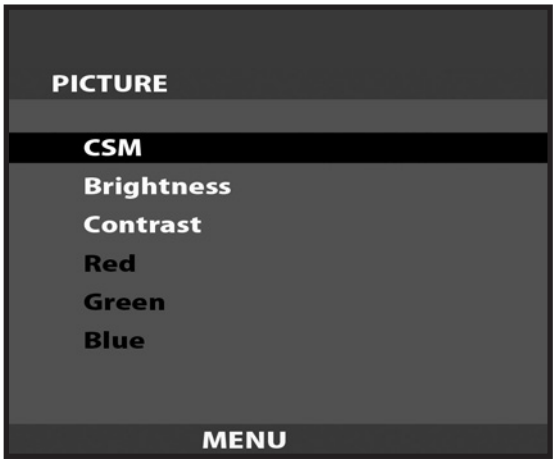

11-3 Fig. 04

Use the UP and DOWN Buttons to move the 'Black Bar'to the item you want to adjust.
After selecting the desired item, pressing the SELECT Button will extend the MENU Screen and allow adjustments to be changed.

Within each item, press the SELECT Button to exit the adjustment screen. The adjustment values at this time will be saved simultaneously.

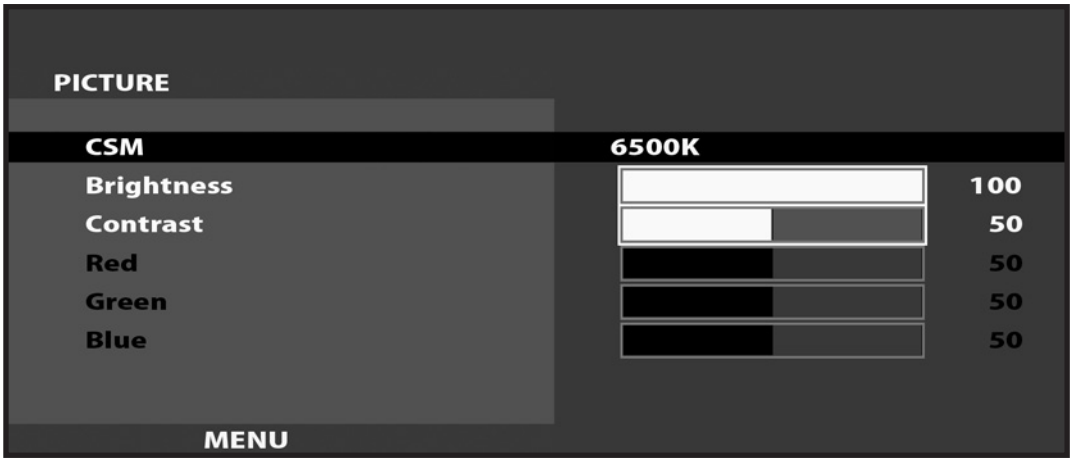

11-3 Fig. 05

The current options are set at :

CSM	-	6500K
Brightness	-	100
Contrast	-	50

You can get this game at www.magic-play.eu

You can get this game at www.magic-play.eu

11-3 ADJUSTMENT METHOD

On-Screen Display (OSD) <continued>

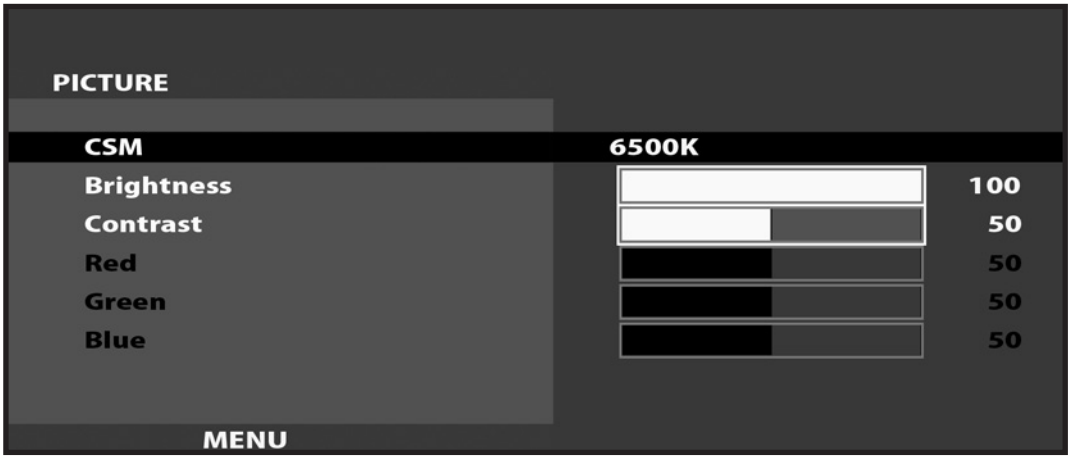

11-3 Fig. 06

Available Settings

CSM (Selects Operation Mode))
Selection availble - 6500K - 9300K - USER

BRIGHTNESS (Adjust Brightness)
Adjust screen Brightness. - Values: 0 - 100
(0" being the darkest setting, and "100" being the brightest)

CONTRAST (Adjust Contrast)
Adjust Contrast level. - Values: 0 - 100
(0" having the least amount of difference between light and dark, and "100" having the most)

NOTE : The Red, Green, and Blue adjustments are unavailable in the Mode of Operation selected on the Screen shown in 11-3 Fig. 06. These adjustments can only be made is the CSM option is set to 'User'.

You can get this game at www.magic-play.eu

You can get this game at www.magic-play.eu

12 COIN HANDLING

Handling the Coin Jam

If the coin is not rejected when the REJECT button is pressed, open the coin chute door and open the selector gate. After removing the jammed coin, put a normal coin in and check to see that the selector correctly functions.

12-1 CLEANING THE COIN SELECTOR

STOP IMPORTANT

- **Remove and clean smears by using a soft cloth dipped in water or diluted chemical detergent and then squeezed dry.**
- **Never apply machine oil, etc. to the Coin Selector.**
- **After cleaning the Coin Selector, insert a regular coin in the normal working status and ensure that the selector correctly functions.**

The Coin Selector should be cleaned once every 3 months.
When cleaning, follow the procedure below:

1. Turn the power for the machine OFF. Open the Coin Chute Door
2. Remove the Coin Selector from the Coin Chute Door
3. Open the gate and dust off by using a soft brush (Small soft Paint Brush, etc.)

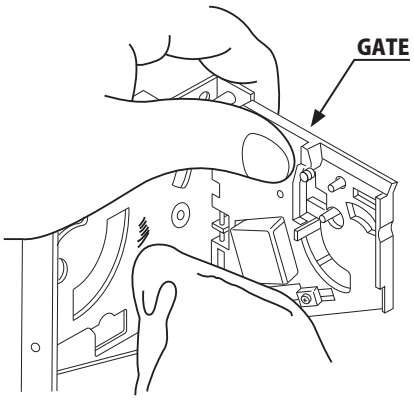

12-1 FIG 1

You can get this game at www.magic-play.eu

You can get this game at www.magic-play.eu

CLEANING THE COIN SELECTOR (MECHANICAL).

1 Remove and clean smears by using a soft cloth dipped in water or diluted chemical detergent and then squeezed dry.

2 Remove the CRADLE.. When removing the retaining ring (E ring) be very careful so as not to bend the rotary shaft.

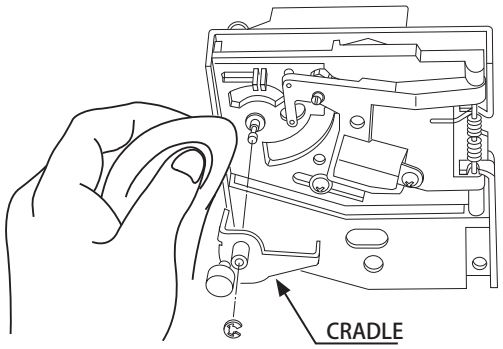

12-1 FIG 2

3 Remove stain from the rotary shaft and shaft receiving portions by wiping off with a soft cloth. etc.

4 After wiping off as per previous step, further apply a dry cloth to completely dry the Coin Selector.

Coin Insertion Test

Once every month, when performing the Coin SW Test, simultaneously check the following:

Does the Coin Meter count satisfactorily?

Does the coin drop into the cashbox correctly?

Is the coin rejected when inserted while keeping the REJECT Button pressed down?

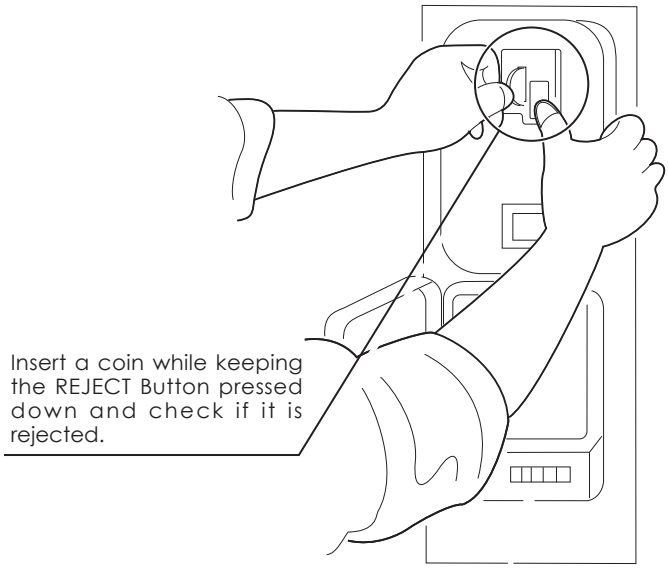

12-1 FIG 3

You can get this game at www.magic-play.eu

You can get this game at www.magic-play.eu

CLEANING THE COIN SELECTOR (SR3 / NRI)

1 Remove and clean smears by using a damp soft cloth dipped in water. DO NOT use any diluted chemical detergent or cleansing agent as this will impair the workings of the component.

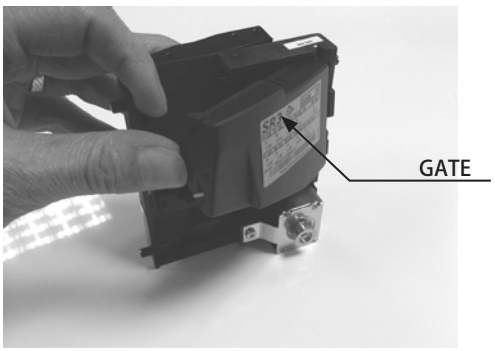

2 Open the reject gate to gain access to the rundown path.

3 Remove the dirt and stains from the runway by wiping off with a soft damp cloth.

4 After wiping off as per previous step, further apply a dry cloth to completely dry the coin Selector.

You can get this game at www.magic-play.eu

You can get this game at www.magic-play.eu

12-2 FAULT FINDING

Fault Finding

The following information is presented for customers' guidance in rectifying a fault but does not cover all possible causes.

All acceptors with electronic faults should be returned to an approved service centre for repair.

SYMPTOM	INVESTIGATE	POSSIBLE CAUSE
Acceptor does not work (all coins reject)	Connector	Poor Contact
		Loose Wire
	Power Supply	Not switched on
		Incorrect voltage
		Inadequate current
		Rise time too slow
	Inhibit all inputs	Acceptor Inhibited
	Accept gate	Gate not free or dislocated
	Accept channel	Obstruction
	Reject gate	Not fully closed
	LED on rear cover RED	EEPROM chksm error
		SR Sensor fault
		Credit opto fault
		Credit sensor blocked
		Reject lever pressed
	LED on rear cover YELLOW	Reinstall power
Poor Acceptance	Power Supply	Voltage less than 10v (Voltage drops when coil engages)
	Accept gate	Gate jam or dislocated
	Connector	Loose
	Coin rundown	Dirty
	Bank Select	Both banks enabled
Coin stick or jam in acceptor.	Accept channel	Acceptor dirty or may have some damage
	Accept gate	
	Regect gate	
A true coin type rejects	Label	Coin not programmed
No accept signal	Connector	Loose or broken wire
	Accept channel	Path dirty or obstructed

You can get this game at www.magic-play.eu

You can get this game at www.magic-play.eu

12-3 ADJUSTING THE PRICE OF PLAY (EXCEL)

STOP IMPORTANT

- **The price of play is determined by the configuration of switches located on either an EXCEL board or VTS board. The type of board used is determined by product location. Switch settings for both types of board remain the same.**

This product comes equipped with a Crane NRI Coin Acceptor. To adjust the price of play ALL credit setting are adjusted via the EXCEL CREDIT BOARD.

IMPORTANT!
The CREDIT SETTINGS within the SYSTEM TEST MODE must be set to 1 coin 1 credit to allow the CREDIT BOARD to function correctly.

The CREDIT BD has a built accumilator. This is controlled by 2 DIL Switches. These allow the operator to select the price of play, type of coin acceptor and region.

EXCEL Credit Board

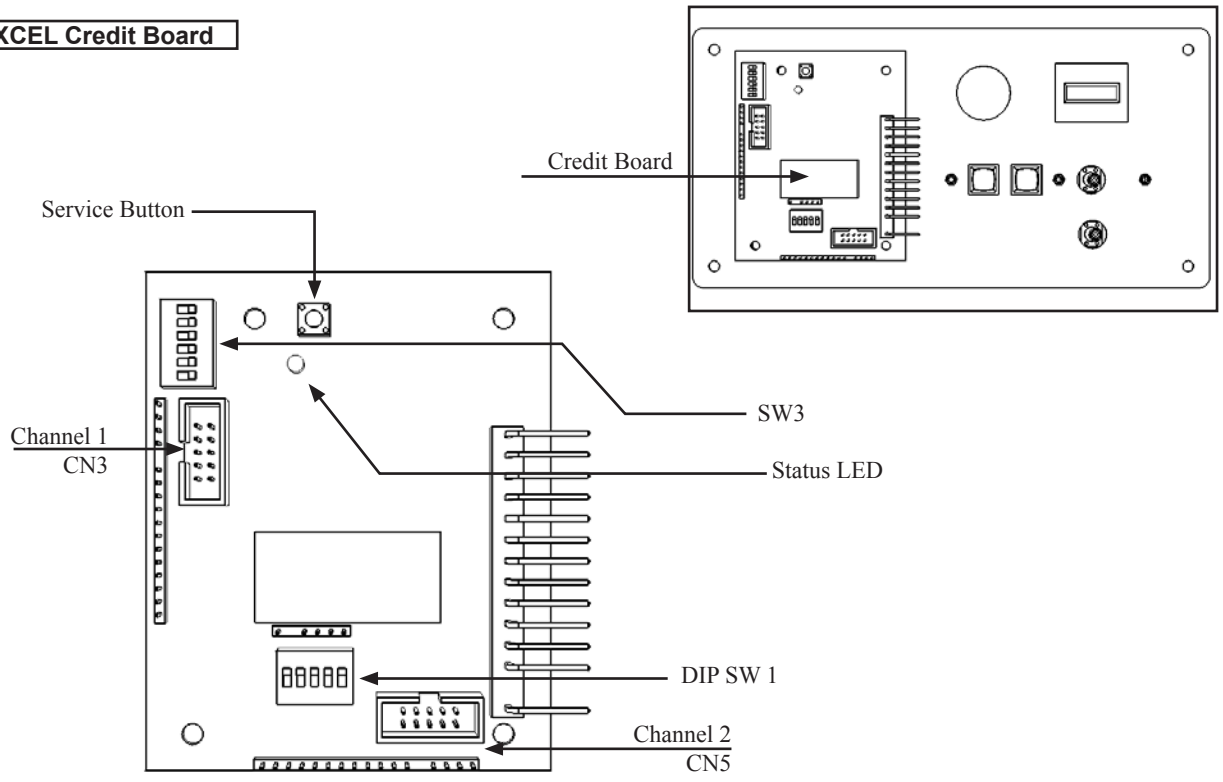

DIL SW3 (Regional Settings)
Adjust these switches to specify the type of Coin Acceptor used and currency.

Default = SW1&SW2 ON - SR3/NRI in parallel mode, Sterling.

SERVICE BUTTONProvides a SERVICE CREDIT when pressed

Status LED	Flashes when functioning.
CHANNEL 1	To Coin Acceptor (SR3 TYPE.)
DIL SW1 (credit settings)	Adjust to required price of pay.
VOL CONTROL	MAIN VOLUME ADJUSTMENT (FRONT SPEAKERS)

You can get this game at www.magic-play.eu

You can get this game at www.magic-play.eu

12-4 ADJUSTING THE PRICE OF PLAY (VTS)

This product comes equipped with a Crane NRI Coin Acceptor. To adjust the price of play ALL credit setting are adjusted via the EXCEL CREDIT BOARD.

IMPORTANT!
The CREDIT SETTINGS within the SYSTEM TEST MODE must be set to 1 coin 1 credit to allow the CREDIT BOARD to function correctly.

The VTS BD has a built in Credit Board. This is controlled by 2 DIL Switches. These allow the operator to select the price of play, type of coin acceptor and region.

VTS Board

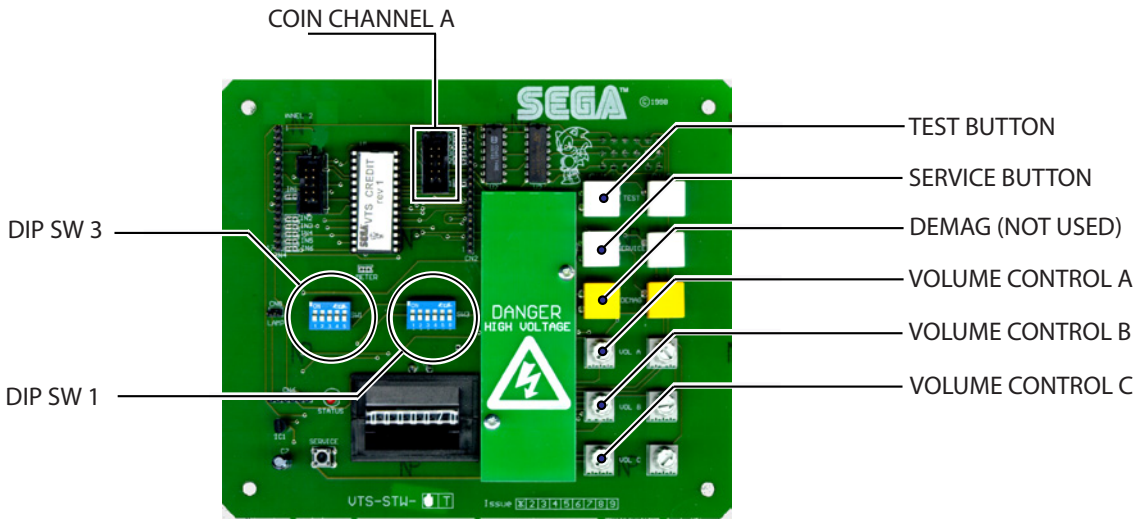

DIL SW3 (Regional Settings)
Adjust these switches to specify the type of Coin Acceptor used and currency.

Default = SW1&SW2 ON - SR3 in parallel mode, Sterling.

TEST BUTTON	Provides access to the TEST MENU when pressed.
SERVICE BUTTON	Provides a SERVICE CREDIT when pressed
Status LED	Flashes when functioning.
CHANNEL A	To Coin Acceptor (SR3 TYPE.)
DIL SW1 (credit settings)	Adjust to required price of pay.
DEMAG	NOT USED
VOL CONTROL A ADJUSTMENT (FRONT SPEAKERS)	MAIN VOLUME
VOL CONTROL B VOL ADJUSTMENT (GUN SPEAKERS)	SECONDARY
VOL CONTROL C	NOT USED

You can get this game at www.magic-play.eu

You can get this game at www.magic-play.eu

REGIONAL AND ACCEPTOR SETTINGS (SW3)

Credit Board Mode Settings Switch 3																			
Country	Setting	Switch 3 Setting						Coin Validator Programming								C120/SR3 Only			
		SW1	SW2	SW3	SW4	SW5	SW6	COIN1	COIN2	COIN3	COIN4	COIN5	COIN6	COIN7	COIN8	COIN9	COIN10	COIN11	COIN12
UK	Coin Controls C220 Parallel	OFF	OFF	OFF	OFF			£1	50p new	20p	10p	-	50p old	-	-				
UK	Coin Controls C220 Binary	ON	OFF	OFF	OFF			£1	50p new	20p	10p	-	50p old	-	£2				
UK	Coin Controls C220 Binary	OFF	ON	OFF	OFF			£1	50p new	20p	10p	-	£2	-	50p old				
UK	Coin Controls SR3 Parallel	ON	ON	OFF	OFF			£1	50p new	20p	10p	-	£2	-	50p old	-	-	-	-
UK Euro	Coin Controls SR3 Parallel	OFF	OFF	ON	OFF			£2 €2	£1 €1	50p new 50¢	20p 20¢	10p 10¢	-	-	-	50p old	-	-	-
UK	Mars ME/MS 111 Parallel	ON	OFF	ON	OFF			£1	£2	20p	10p	50p new	50p old						
UK	NRI Parallel	OFF	ON	ON	OFF			10p	20p	50p	£1	£2	-						
Belgium	Parallel	ON	ON	ON	OFF			-	50BFr	20BFr	5BFr								
Holland	Parallel	OFF	OFF	OFF	ON			-	5NLG	2.5NLG	1NLG								
Austria	SR3 Parallel	ON	OFF	OFF	ON			20Sch	10Sch	5Sch	1Sch								
Spain	Coin Controls C220 Binary	OFF	ON	OFF	ON			500Pta	200Pta	100Pta	50Pta	25Pta	200Pt old	50Pta old	25Pta old				
Spain	SR3/NRI Parallel	ON	ON	OFF	ON			500Pta	200Pta	100Pta	50Pta	25Pta	-	-	200Pta	-	50Pta old	25Pta old	-
Spain	Coin Controls C220 Parallel	OFF	OFF	ON	ON			100Pta	50Pta new	-	25Pta new	-	50Pta old	-	25Pta old				
Portugal Euro	Parallel	ON	OFF	ON	ON			200Es €1	100Es 50¢	50Es	-	-	-	-	-				
	TBA					OFF		TBA					**Please Note** The credit board automatically sets the validator for parallel and binary operation through an output on pin 8 of the 17 way pinstrip. For the feature to work it is necessary for the validator interconnecting cable to include at wire at this position							
						ON		TBA											
	Channels						OFF	Direct Mode											
							ON	2 channel Mode											

Note: These switch settings are under constant review and may change due to world currency updates.

Set SW 1 according to the option settings found in the relevant Price of Play Settings Table on the following pages.

Set SW 3 on the VTS /Excel board as shown in the table above corresponding to the country required.

You can get this game at www.magic-play.eu

You can get this game at www.magic-play.eu

STERLING PRICE OF PLAY SETTINGS (SW1)

	Price	Bonus			DIL Switch 1				
					1	2	3	4	5
1	10p	50p = 5 plays	£1 = 10 plays	£2 = 20 plays	OFF	OFF	OFF	OFF	OFF
2	10p	50p = 6 plays @ 8.33p per play	£1 = 12 plays @ 8.33p per play	£2 = 24 plays @ 8.33p per play	**ON**	OFF	OFF	OFF	OFF
3	20p	50p = 2.5 plays	£1= 5 plays	£2 = 10 plays	OFF	**ON**	OFF	OFF	OFF
4	20p	50p = 3 plays @ 16.66p per play	£1 = 6 plays @ 16.66p per play	£2 = 12 plays @ 16.66p per play	**ON**	**ON**	OFF	OFF	OFF
5	30p	50p = 1.66 plays	£1 = 3.33 plays	£2 = 6.66 plays	OFF	OFF	**ON**	OFF	OFF
6	30p	50p = 1.66 plays	£1 = 4 plays @ 25p per play	£2 = 8 plays @ 25p per play	**ON**	OFF	**ON**	OFF	OFF
7	30p	50p = 2 plays @ 25p per play	£1 = 4 plays @ 25p per play	£2 = 8 plays @ 25p per play	OFF	**ON**	**ON**	OFF	OFF
8	30p	50p = 2 plays @ 25p per play	£1 = 3 plays @ 33.33p per play	£2 = 6 plays @ 33.33p per play	**ON**	**ON**	**ON**	OFF	OFF
9	40p	50p = 1.25 plays	£1 = 2.5 plays	£2 = 5 plays	OFF	OFF	OFF	**ON**	OFF
10	40p	50p = 1.25 plays	£1 = 3 plays @ 33.3p per play	£2 = 6 plays & 33.3p per play	**ON**	OFF	OFF	**ON**	OFF
11	50p	50p = 1 play	£1 = 2 plays	£2 = 4 plays	OFF	**ON**	OFF	**ON**	OFF
12	50p	50p = 1 play	£1 = 3 plays @ 33.3p per play	£2 = 6 plays @ 33.3p per play	**ON**	**ON**	OFF	**ON**	OFF
13	50p	50p = 1 play	£1 = 2 plays	£2 = 5 plays @ 40p per play	OFF	OFF	**ON**	**ON**	OFF
14	60p	50p = 0.83 play	£1 = 1.66 plays	£2 = 3.33 plays	**ON**	OFF	**ON**	**ON**	OFF
15	60p	50p = 0.83 play	£1 = 2 plays @ 50p per play	£2 = 4 plays @ 50p per play	OFF	**ON**	**ON**	**ON**	OFF
16	80p	50p = 0.62 play	£1 = 1.25 plays	£2 = 2.5 plays	**ON**	**ON**	**ON**	**ON**	OFF
17	80p	£1 = 1.25 plays	£1.50 = 2 plays @ 75p per play	£2 = 2.5 plays	OFF	OFF	OFF	OFF	**ON**
18	£1	2x50p = 1 play	£1 = 1 play	£2 = 2 plays	**ON**	OFF	OFF	OFF	**ON**
19	£1	2x50p = 1 play	£1 = 1 play	£2 = 3 plays @ 66.6p per play	OFF	**ON**	OFF	OFF	**ON**
20	£1	2x50p = 1 play	£2 = 2 plays	£4 = 5 plays @ 80p per play	**ON**	**ON**	OFF	OFF	**ON**
21	£1.50	3x50p = 1 play	£1 = 0.66 plays	£3 = 2 plays	OFF	OFF	**ON**	OFF	**ON**
22	£1.50	3x 50p = 1 play	£1 = 0.66 plays	£2 = 2 plays @ £1 per play	**ON**	**OFF**	**ON**	OFF	**ON**
23	£2	4x 50p = 1 play	£1 = 0.5 play	£2 = 1 play	OFF	**ON**	**ON**	OFF	**ON**
24	£2	4x 50p = 1 play	£1 = 0.5 play	£5 = 3 plays @ £1.66 per play	**ON**	**ON**	**ON**	OFF	**ON**
25	£3	6x50p = 1 play	£1.50 = 0.5 play	£3 = 1 play	OFF	OFF	OFF	**ON**	**ON**
26	£3	6x50p = 1 play	£1.50 = 0.5 play	£5 = 2 plays @ £2.50 per play	**ON**	OFF	OFF	**ON**	**ON**
27	£5	£1 = 0.2 play	£5 = 1 play	£10 = 2 plays	OFF	**ON**	OFF	**ON**	**ON**
28	£5	£1 = 0.2 play	£5 = 1 play	£10 = 3 plays @ £3.33p per play	**ON**	**ON**	OFF	**ON**	**ON**
29	£7.50	£5 = 0.66 play	£10 = 1.33 plays	£15 = 2 plays	OFF	OFF	**ON**	**ON**	**ON**
30	£7.50	£5 = 0.66 play	£10 = 1.33 plays	£10 = 2 plays @ £5 per play	**ON**	OFF	**ON**	**ON**	**ON**
31	£10	£10 = 1 play	£20 = 2 play	£30 = 3 play	OFF	**ON**	**ON**	**ON**	**ON**
32	Free Play				**ON**	**ON**	**ON**	**ON**	**ON**

You can get this game at www.magic-play.eu

You can get this game at www.magic-play.eu

EURO PRICE OF PLAY SETTINGS (SW1)

	Price	Bonus			DIL Switch 1				
					1	2	3	4	5
1	10¢	50¢ = 5 plays	€1 = 10 plays	€2 = 20 plays	OFF	OFF	OFF	OFF	OFF
2	10¢	50¢ = 6 plays @ 8.33p per play	€1 = 12 plays @ 8.33¢ per play	€2 = 24 plays @ 8.33¢ per play	**ON**	OFF	OFF	OFF	OFF
3	20¢	50¢ = 2.5 plays	€1= 5 plays	€2 = 10 plays	OFF	**ON**	OFF	OFF	OFF
4	20¢	50¢ = 3 plays @ 16.66¢ per play	€1 = 6 plays @ 16.66¢ per play	€2 = 12 plays @ 16.66¢ per play	**ON**	**ON**	OFF	OFF	OFF
5	30¢	50¢ = 1.66 plays	€1 = 3.33 plays	€2 = 6.66 plays	OFF	OFF	**ON**	OFF	OFF
6	30¢	50¢ = 1.66 plays	€1 = 4 plays @ 25¢ per play	€2 = 8 plays @ 25¢ per play	**ON**	OFF	**ON**	OFF	OFF
7	30¢	50¢ = 2 plays @ 25¢ per play	€1 = 4 plays @ 25¢ per play	€2 = 8 plays @ 25¢ per play	OFF	**ON**	**ON**	OFF	OFF
8	30¢	50¢ = 2 plays @ 25¢ per play	€1 = 3 plays @ 33.33¢ per play	€2 = 6 plays @ 33.33¢ per play	**ON**	**ON**	**ON**	OFF	OFF
9	40¢	50¢ = 1.25 plays	€1 = 2.5 plays	€2 = 5 plays	OFF	OFF	OFF	**ON**	OFF
10	40¢	50¢ = 1.25 plays	€1 = 3 plays @ 33.33¢ per play	€2 = 6 plays @ 33.33¢ per play	**ON**	OFF	OFF	**ON**	OFF
11	50¢	50¢ = 1 play	€1 = 2 plays	€2 = 4 plays	OFF	**ON**	OFF	**ON**	OFF
12	50¢	50¢ = 1 play	€1 = 3 plays @ 33.33¢ per play	€2 = 6 plays @ 33.33¢ per play	**ON**	**ON**	OFF	**ON**	OFF
13	50¢	50¢ = 1 play	€1 = 2 plays	€2 = 5 plays @ 40¢ per play	OFF	OFF	**ON**	**ON**	OFF
14	60¢	50¢ = 0.83 play	€1 = 1.66 plays	€2 = 3.33 plays	**ON**	OFF	**ON**	**ON**	OFF
15	60¢	50¢ = 0.83 play	€1 = 2 plays @ 50¢ per play	€2 = 4 plays @ 50¢ per play	OFF	**ON**	**ON**	**ON**	OFF
16	80¢	50¢ = 0.62 play	€1 = 1.25 plays	€2 = 2.5 plays	**ON**	**ON**	**ON**	**ON**	OFF
17	80¢	£1 = 1.25 plays	€1.50 = 2 plays @ 75¢ per play	€2 = 2.5 plays	OFF	OFF	OFF	OFF	**ON**
18	€1	2x50¢ = 1 play	€1 = 1 play	€2 = 2 plays	**ON**	OFF	OFF	OFF	**ON**
19	€1	2x50¢ = 1 play	€1 = 1 play	€2 = 3 plays @ 66.6¢ per play	OFF	**ON**	OFF	OFF	**ON**
20	€1	2x50¢ = 1 play	€2 = 2 plays	€4 = 5 plays @ 80¢ per play	**ON**	**ON**	OFF	OFF	**ON**
21	€1.50	3x50¢ = 1 play	€1 = 0.66 plays	€3 = 2 plays	OFF	OFF	**ON**	OFF	**ON**
22	€1.50	3x 50¢ = 1 play	€1 = 0.66 plays	€2 = 2 plays @ €1 per play	**ON**	**OFF**	**ON**	OFF	**ON**
23	€2	4x 50¢ = 1 play	€1 = 0.5 play	€2 = 1 play	OFF	**ON**	**ON**	OFF	**ON**
24	€2	4x 50¢ = 1 play	€1 = 0.5 play	€5 = 3 plays @ €1.66 per play	**ON**	**ON**	**ON**	OFF	**ON**
25	€3	6x50¢ = 1 play	€1.50 = 0.5 play	€3 = 1 play	OFF	OFF	OFF	**ON**	**ON**
26	€3	6x50¢ = 1 play	€1.50 = 0.5 play	€5 = 2 plays @ €2.50 per play	**ON**	OFF	OFF	**ON**	**ON**
27	€5	€1 = 0.2 play	€5 = 1 play	€10 = 2 plays	OFF	**ON**	OFF	**ON**	**ON**
28	€5	€1 = 0.2 play	€5 = 1 play	€10 = 3 plays @ 3.33¢ per play	**ON**	**ON**	OFF	**ON**	**ON**
29	€7.50	€5 = 0.66 play	€10 = 1.33 plays	€15 = 2 plays	OFF	OFF	**ON**	**ON**	**ON**
30	€7.50	€5 = 0.66 play	€10 = 1.33 plays	€10 = 2 plays @ €5 per play	**ON**	OFF	**ON**	**ON**	**ON**
31	€10	€10 = 1 play	€20 = 2 play	€30 = 3 play	OFF	**ON**	**ON**	**ON**	**ON**
32	Free Play				**ON**	**ON**	**ON**	**ON**	**ON**

12 COIN HANDLING

You can get this game at www.magic-play.eu

You can get this game at www.magic-play.eu

12-5 NRI OPTIONS - STERLING / EURO SELECT

SELECTING STERLING / EURO OPTION

The NRI coin acceptor (supplied) is programmed to accept UK Sterling and the Euro. Factory setting is for the UK Sterling. If the configuration needs to change to the Euro, then please follow the instructions below for changing over to the Euro and visa versa.

Coin Information - Memory Block 0 (DIL switch S1.10 is set to OFF)
Memory Block 1 (DIL switch S1.10 is set to ON)

If the coin validator is to access the other memory block and, e.g., accept euro coins instead of national currency coins, the correct block can be selected using the upper switching block:

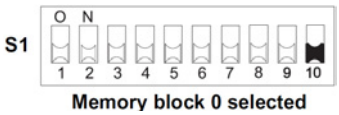

Memory block 0 selected

Sterling selection

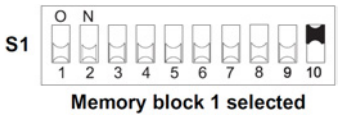

Memory block 1 selected

Euro selection

To select memory block 0, (STERLING) move DIL switch S1.10 of the upper switching block to the bottom OFF position, for memory block 1, move it to the ON position.

You can get this game at www.magic-play.eu

You can get this game at www.magic-play.eu

12-6 NRI OPTIONS - TEACH AND RUN PROGRAMMING

TEACH AND RUN PROGRAMMING (NRI)

If the machine is positioned in location where only tokens are used, then the NRI Coin Acceptor can be programmed to accept and credit special coins/tokens.

Please follow the instructions below to enable and program the TEACH & RUN facility.

TEACHING COIN CHANNELS USING TEACH MODE

In order to generate new acceptance bands you can teach up to eight coin channels using the lower switching block on the coin validator. You will need at least ten coins of the new type. There is a different switch assignment for the double and single block data-management:

Switching block S2 (with double block data-management)

DIL switch		off	on
S2.1	Coin channel 9		teach
S2.2	Coin channel 10		teach
S2.3	Coin channel 11		teach
S2.4	Coin channel 12		teach
S2.5	Coin channel 13		teach
S2.6	Coin channel 14		teach
S2.7	Coin channel 15		teach
S2.8	Coin channel 16		teach
S2.9	Teach mode	switch off	switch on
S2.10	Acceptance band	normal	wide

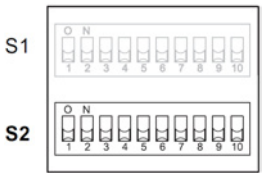

By default, the eight teach channels have been programmed, so that one coin impulse is transmitted to the machine via coin signal line 6, when a new coin is accepted.

You can get this game at www.magic-play.eu

You can get this game at www.magic-play.eu

13 LAMPS AND LIGHTING

⚠WARNING

- **When working with the product, be sure to turn the power off. Working with the power on may cause an electric shock or short circuit.**
- **You may get burned by a hot fluorescent lamp or other lamps. Pay full attention to the lamps when performing the work.**
- **Be sure to use lamps of the designated rating. Using lamps of undesignated rating can cause a fire or malfunctioning.**
- **There is the danger of short circuits or smoke generation due to deterioration of insulation in lighting fixtures resulting from age deterioration. Check for anomalies such as the following: Does it smell like something is burning? Is there socket discoloration? Are any lamps being replaced frequently? Do lamps not go on properly?**

⚠CAUTION

The Coin Door Lamp utilises a 12v 1.2w Wedge Bulb. It is important that you replace this bulb or any other bulb of that of the same voltage and rating. Failing to observe this caution may result in PCB failure or possible fire hazard.

13-1 COIN DOOR LAMP

Step 1. Open the Coin Door and locate the Lamp Housing directly behind the Coin Insert Bezel.

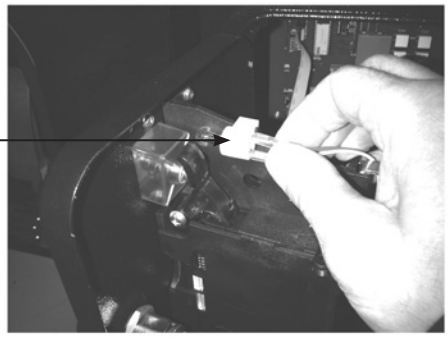

Step 2. Hold the Lamp Housing firmly between your index finger and thumb and gently pull upwards. Do Not try to remove the Lamp Housing whilst holding the bulb a the bulb may break causing injury.

Step 3. Once the Lamp Housing has been removed, carefully hold the bulb between your fingers and pull the Lamp Housing away.

Do not twist either bulb or Lamp Housing whilst removing the bulb as this may cause damage to both bulb and or Housing.

Step 4. Simply push-fit a replacement bulb of the same type and follow these steps in reverse to refit.

You can get this game at www.magic-play.eu

You can get this game at www.magic-play.eu

13-2 START BUTTON LAMP REPLACEMENT

⚠ WARNING

MAKE SURE THAT THE MAIN SUPPLY VOLTAGE TO THE MACHINE IS SWITCHED OFF BEFORE ATTEMPTING TO CARRY OUT THIS WORK

1 Before replacing any lamp, TURN THE POWER OFF.

2 To gain access to the Start Lamps, first remove the Control Panel by unscrewing the 4 M4x16 Socket Cap Screws (4) fitted at each corner.

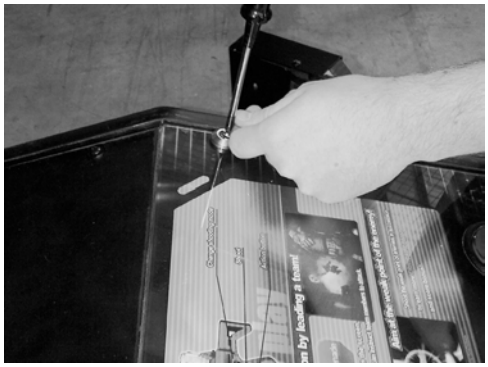

3 Lift the Control Panel to reveal the Star Button Lamp Housings. Hold the housing and gently pull to disengage the lamp housing from the button. The Bulb is a “push to fit” bulb and is removed by pulling the bulb from within the housing.

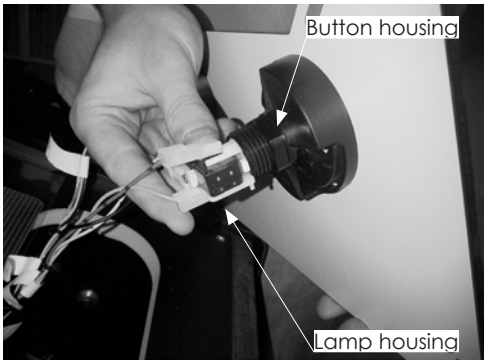

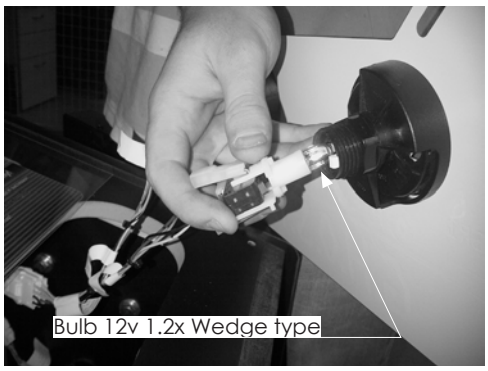

Note:

Do not twist the bulb - twisting the bulb will cause it to break.

You can get this game at www.magic-play.eu

You can get this game at www.magic-play.eu

13-3 SIDE LED REPLACEMENT

⚠ WARNING

MAKE SURE THAT THE MAIN SUPPLY VOLTAGE TO THE MACHINE IS SWITCHED OFF BEFORE ATTEMPTING TO CARRY OUT THIS WORK

1 Before replacing any lamp, TURN THE POWER OFF.

2 Remove the Upper corner bracket and side reflector plate (See chapeter 6 for illustraition).

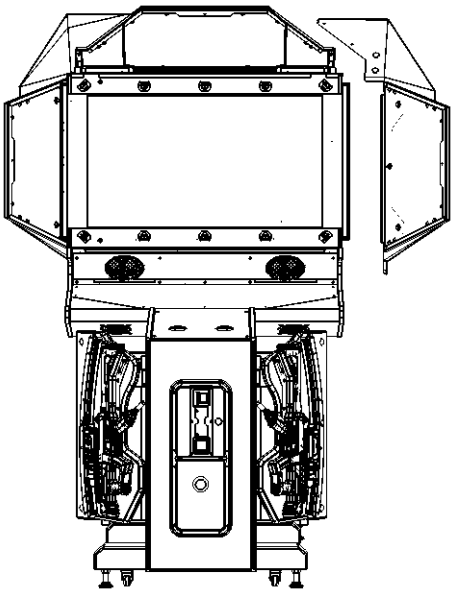

3 Locate and remove the 4x M4x12 Machine screws located in each corner of the Assy Side LED. Once removed, slowly lift the assymbly to release from the cabinet. Disconnect from inside the cabinet before complete removal.

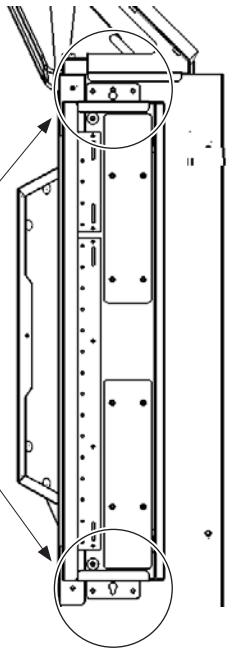

Remove the M4x12 M SCR PH BLK (4) from the outer corners of the ASSY SIDE LED

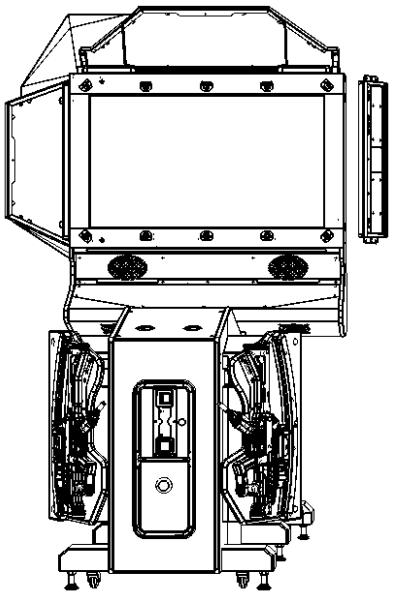

You can get this game at www.magic-play.eu

You can get this game at www.magic-play.eu

4 Unscrew the M4x10 M SCR PH BLK (4) from the LED retaining bkt and slide out the acrylic cover. Once the acrylic cover has been removed, unscrew the M4x10 M SCR PAN BLK (4) from the cover plate and remove to reveal harness connectors.

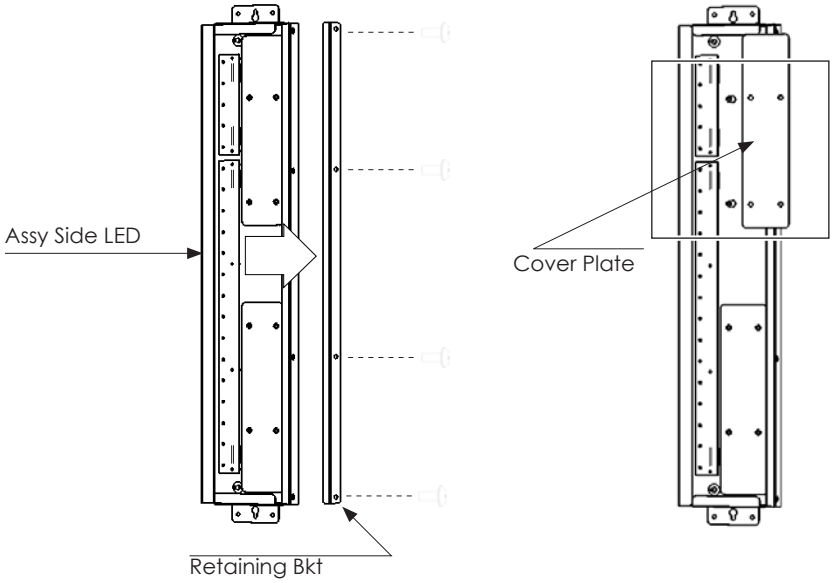

5 Carefully disconnect the LED PCB and unscrew the M3x10 M SCR PAN PAS (2) from the LED PCB. Carefully remove the LED PCB. Refit in reverse order.

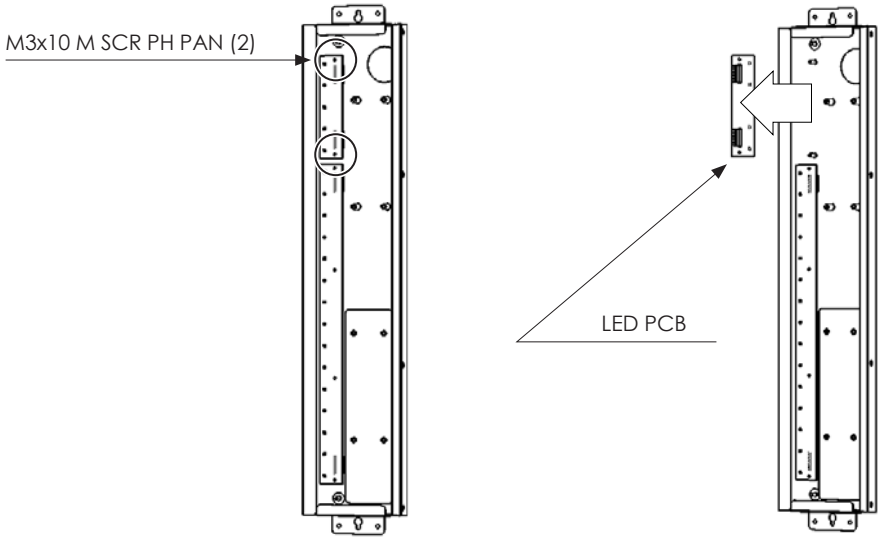

You can get this game at www.magic-play.eu

You can get this game at www.magic-play.eu

13-4 UPPER LED REPLACEMENT

⚠ WARNING

- **THIS WORK ON TOP OF THE CABINET, SHOULD NOT BE UNDERTAKEN WITHOUT THE USE OF A SUITABLE STEP OR FOOTSTOOL.**
- **THE ASSY UPPER REFLECTOR IS HEAVY. BE SURE TO USE AT LEAST TWO PEOPLE FOR THIS OPERATION.**

⚠ WARNING

MAKE SURE THAT THE MAIN SUPPLY VOLTAGE TO THE MACHINE IS SWITCHED OFF BEFORE ATTEMPTING TO CARRY OUT THIS WORK

1 Unscrew the Assy Upper Reflector and Left and Right Upper Brackets and remove. (Please refer to chaper 6 for a detailed instruction).

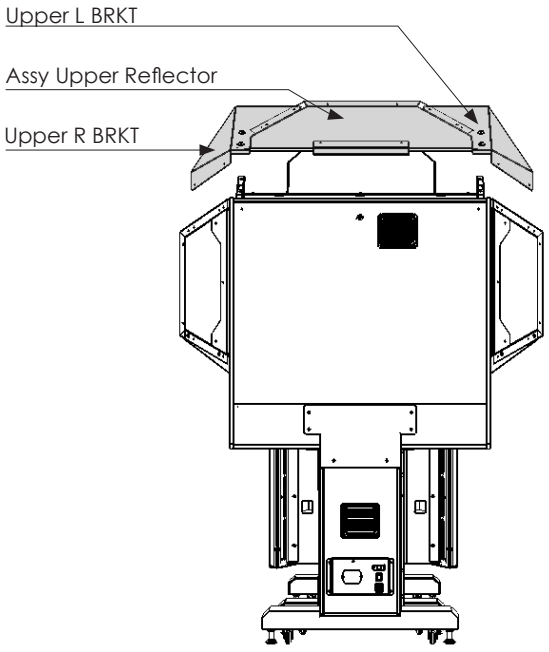

2 Unscrew the 7 M4x12 M SCR PH which retian the LED cover and slide out to remove.

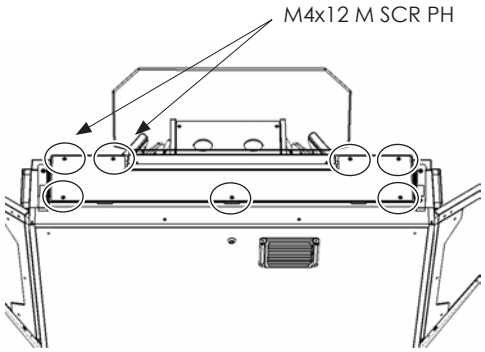

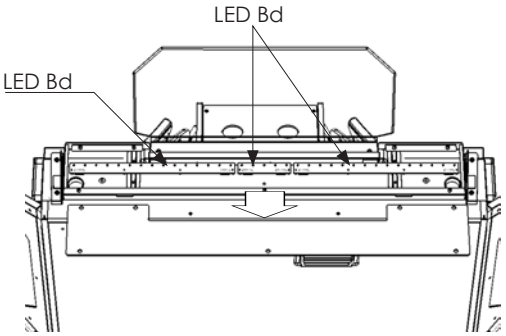

You can get this game at www.magic-play.eu

You can get this game at www.magic-play.eu

3 Once access to the LEDs have been gained. Disconnect the appropriate LED Bd and unscrew the M3x12 M SCR PAN securing screws to remove LED Bd. To re-assemble and re-fit please follow these steps in reverse order.

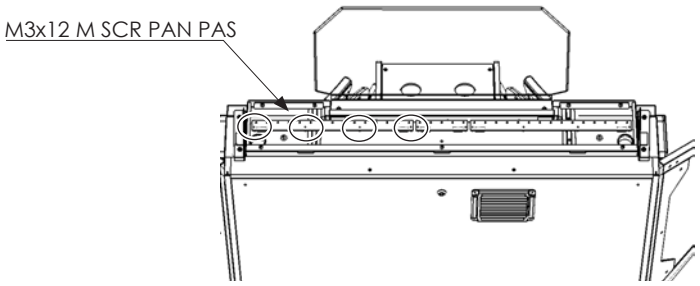

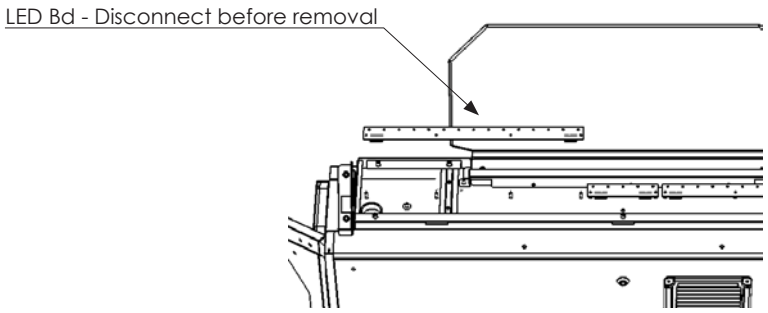

You can get this game at www.magic-play.eu

You can get this game at www.magic-play.eu

13-5 LOWER LED REPLACEMENT

⚠ WARNING

MAKE SURE THAT THE MAIN SUPPLY VOLTAGE TO THE MACHINE IS SWITCHED OFF BEFORE ATTEMPTING TO CARRY OUT THIS WORK

1 Remove the backdoor and locate the LED cover retaining BRKT. Unscrew the 3x M4x12 M SCR PH PAS to remove.

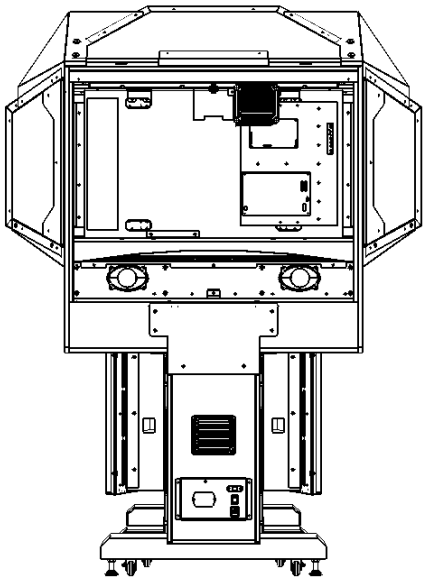

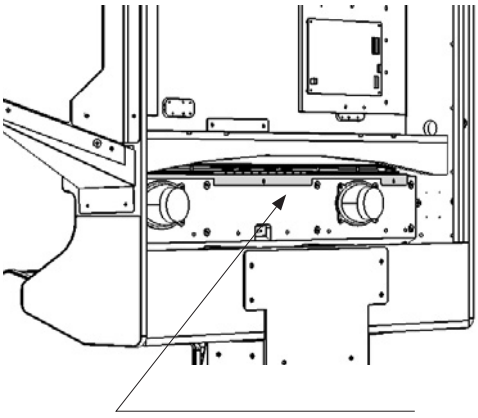

2 Remove the backdoor and locate the LED cover retaining BRKT. Unscrew the 3x M4x12 M SCR PH PAS to remove.

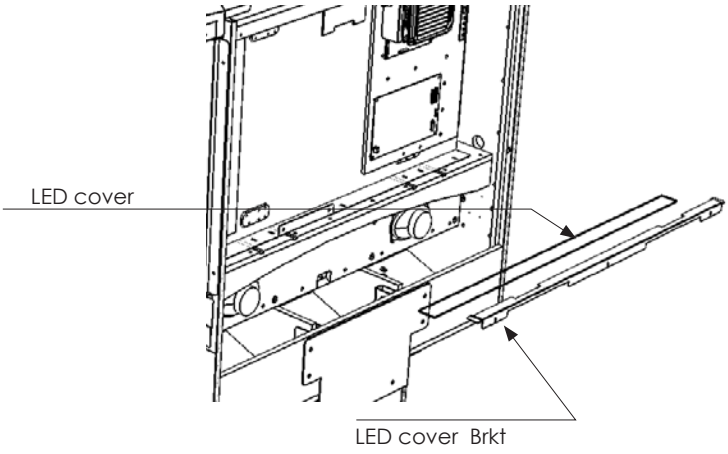

You can get this game at www.magic-play.eu

You can get this game at www.magic-play.eu

3 At the front of the cabinet - Locate the 2x M4x12 Machine Screws which secure the Lower LED Bd Assembly and unscrew.

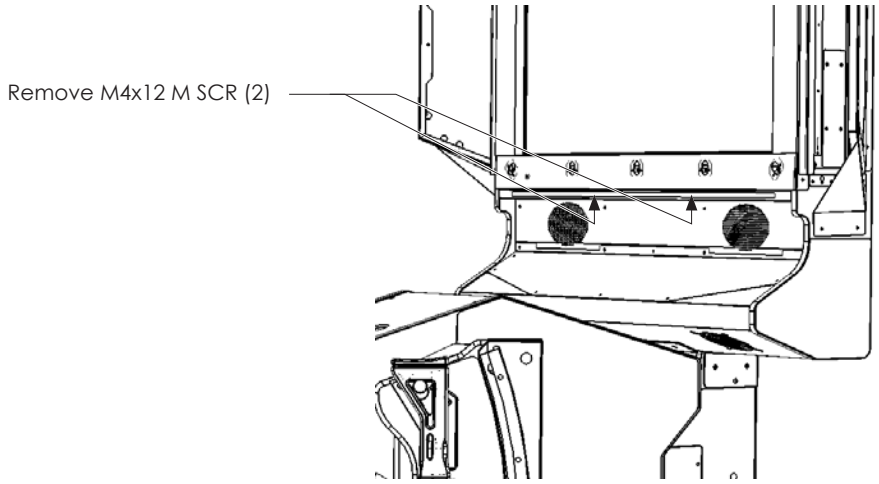

4 At the rear of the cabinet, locate the LED bd mounting Brkt and the 3x M4x12 machine screws which retain it. Unscrew the machine screws and pull to remove.

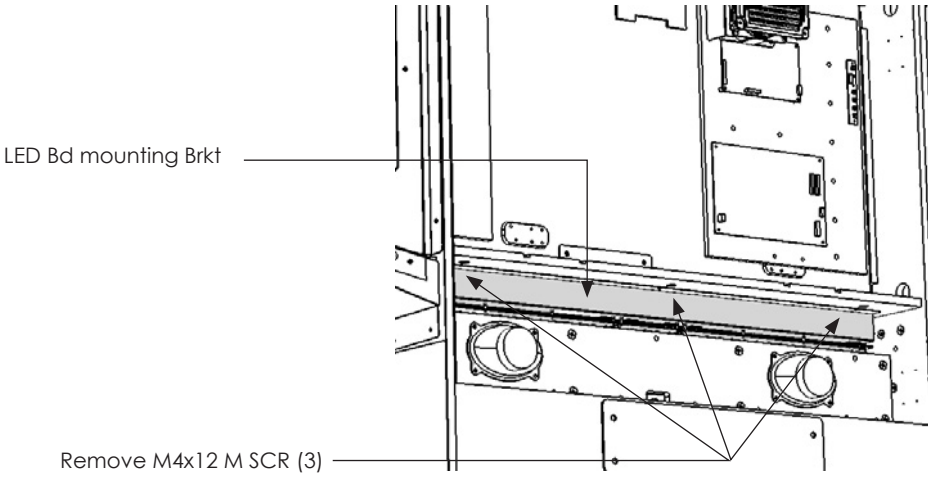

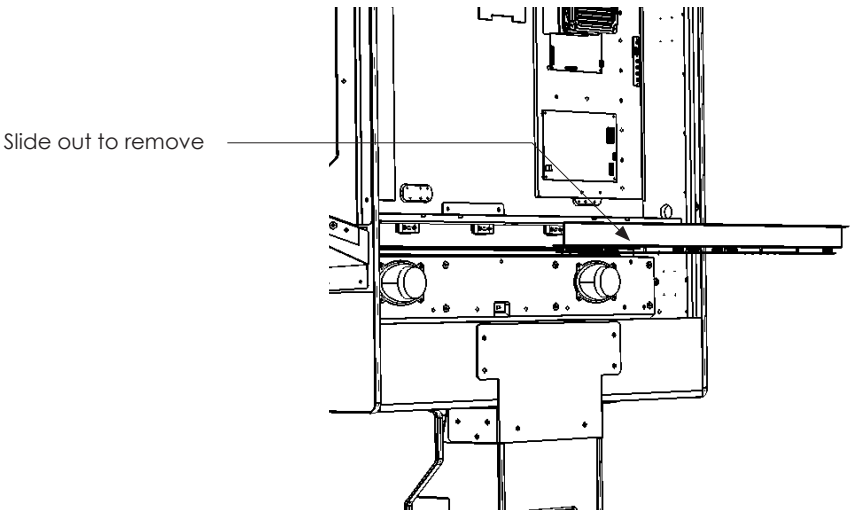

You can get this game at www.magic-play.eu

You can get this game at www.magic-play.eu

5 Disconnect harness and unscrew the individual LED bds to remove. Replace by LED bd by following these steps in reverse order.

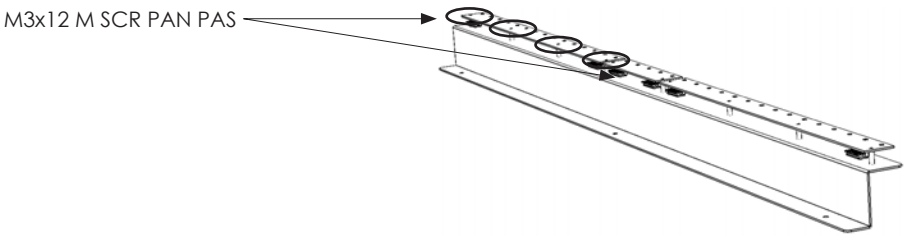

13-6 UPPER MASK ASSY REMOVAL

If a problem occurs with the Controller Alignment and diagnosis reveals that one of the LED Bds within the ASSEMBLY MASK is at fault, please see instructions on removal.

⚠ WARNING

- **THIS WORK ON TOP OF THE CABINET, SHOULD NOT BE UNDERTAKEN WITHOUT THE USE OF A SUITABLE STEP OR FOOTSTOOL.**
- **THE ASSY UPPER REFLECTOR IS HEAVY. BE SURE TO USE AT LEAST TWO PEOPLE FOR THIS OPERATION.**

⚠ WARNING

MAKE SURE THAT THE MAIN SUPPLY VOLTAGE TO THE MACHINE IS SWITCHED OFF BEFORE ATTEMPTING TO CARRY OUT THIS WORK

1 Unscrew the Assy Upper Reflector and Left and Right Upper Brackets and remove. (Please refer to chaper 6 for a detailed instruction).

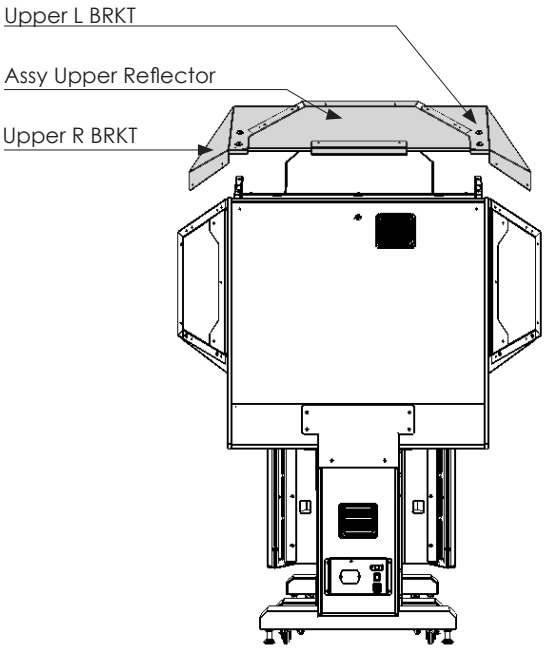

You can get this game at www.magic-play.eu

You can get this game at www.magic-play.eu

2 Unscrew the 7 M4x12 M SCR PH which retian the LED cover and slide out to remove.

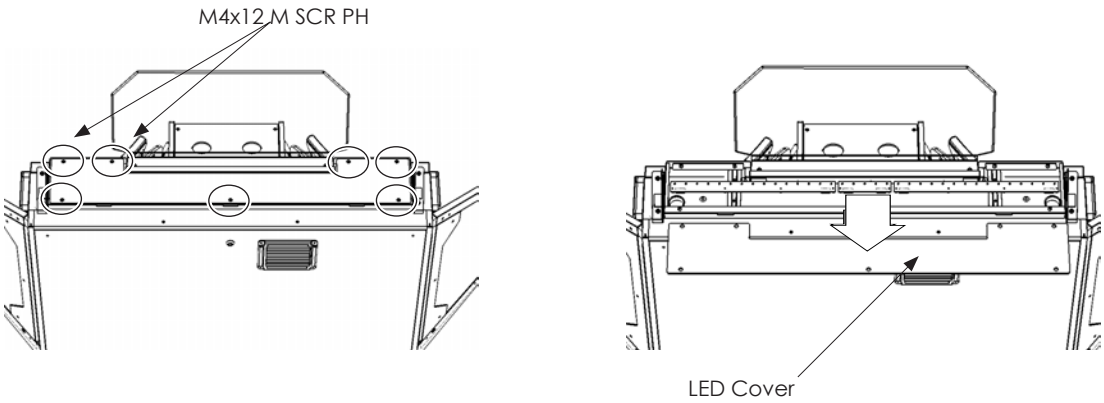

3 Unscrew the 2 M4x25 M SCR PAN W/S from within the UPPER LED UNIT to release the UPPER MASK LED ARRAY.

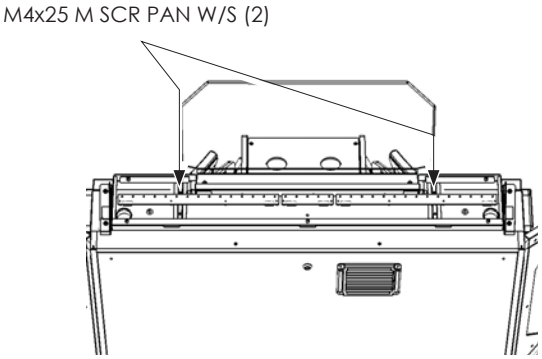

4 From the front of the cabinet, unscrew the M4x12 M SCR TH BLK from each side of the ASSY UPPER MASK, disconnect both harnesses located in the upper left and right corners. Hold each end and carefully slide out to remove.

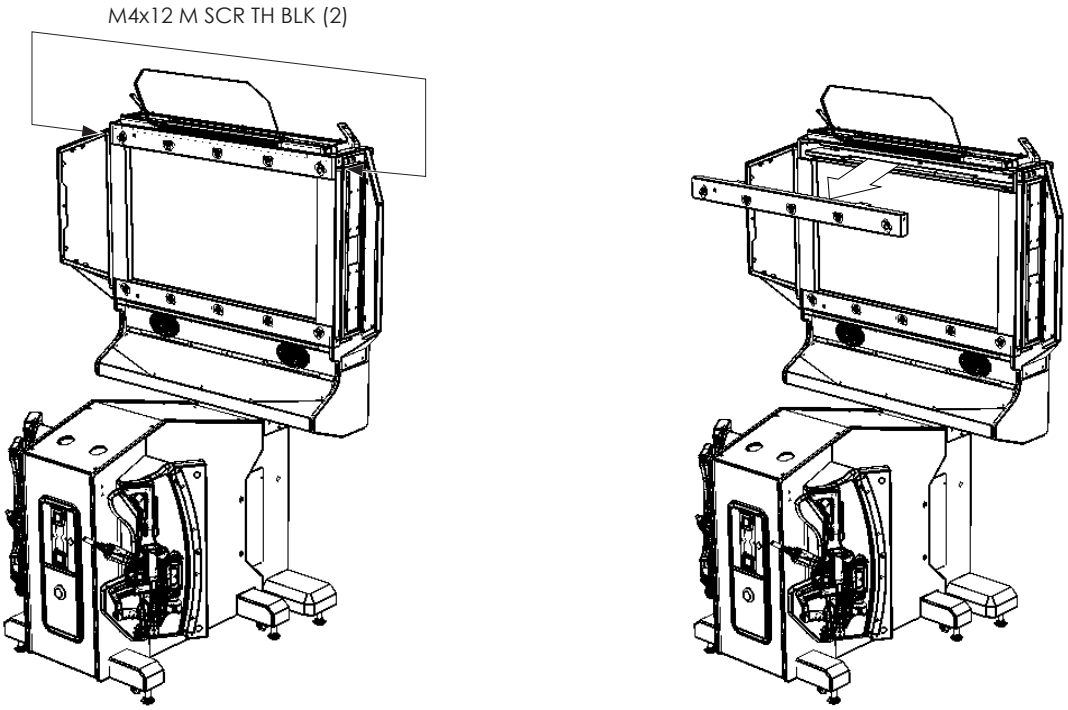

You can get this game at www.magic-play.eu

You can get this game at www.magic-play.eu

5 Once the ASSY UPPER MASK has been removed from the cabinet. Locate the LED Bd and unscrew the M3 NYLOC NUT (2) which secure it to the BRKT. Replace accordingly and reassemble in reverse order..

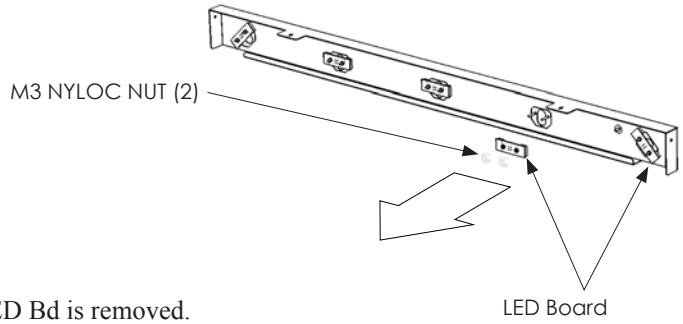

Note:
Please be aware of the orientation in which the LED Bd is removed.

13-7 LOWER MASK ASSY REMOVAL

If a problem occurs with the Controller Alignment and diagnosis reveals that one of the LED Bds within the ASSEMBLY MASK is at fault, please see instructions on removal.

⚠ WARNING

MAKE SURE THAT THE MAIN SUPPLY VOLTAGE TO THE MACHINE IS SWITCHED OFF BEFORE ATTEMPTING TO CARRY OUT THIS WORK

1 Remove the back door and place to one side. Locate the LWR LED COVER BRKT and remove the M4x12 M SCR PAN PAS W/S (3) which secure it to the cabinet. Remove the BRKT along with the LWR LED COVER.

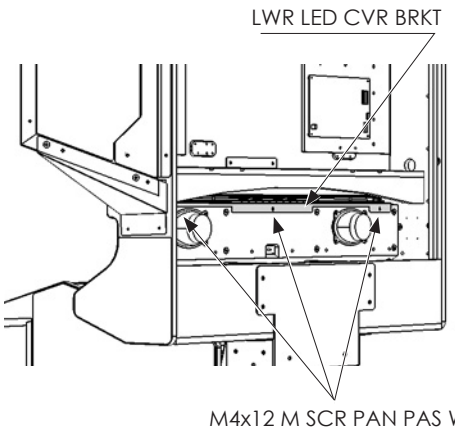

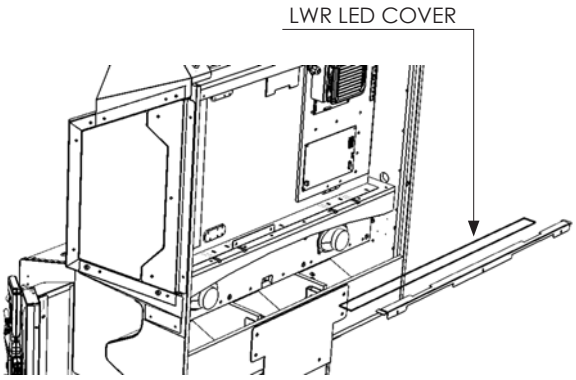

You can get this game at www.magic-play.eu

You can get this game at www.magic-play.eu

2 At the front of the cabinet - Locate the 2x M4x12 Machine Screws which secure the Lower LED Bd Assembly and unscrew.

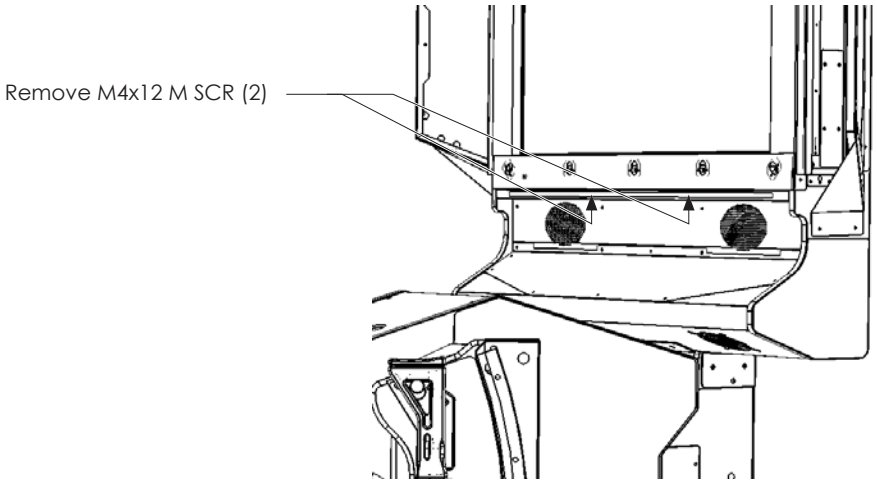

3 At the side of the cabinet - Locate the 2x M4x12 Machine Screws which secure the Lower LED Bd Assembly and unscrew.

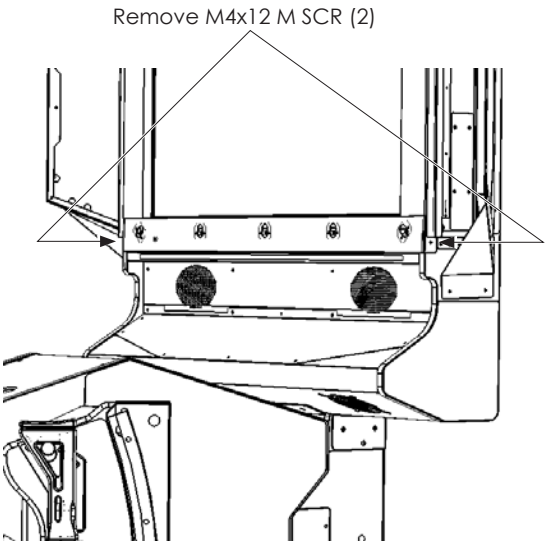

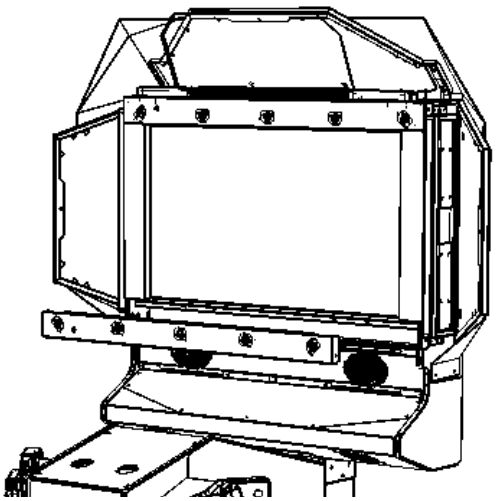

Disconnect harnesses at both ends before removal

4 Slowly withdraw the ASSY LOWER MASK from its position within the cabinet, disconnect the harnesses at both ends before complete removal. To refit, follow instructions in reverse order.

You can get this game at www.magic-play.eu

You can get this game at www.magic-play.eu

14 PERIODIC INSPECTION

The items listed below require periodic check and maintenance to retain the performance of this machine and to ensure safe business operation.
When handling the controller, the player will be in direct contact with it. In order to always allow the player to enjoy the game, be sure to clean it regularly. Also, it is advisable to provide wet tissue, etc. available for player use.

⚠ WARNING

- **Every 6 months check to see if power cords are damaged, the plug is securely inserted, dust is accumulated between the socket outlet and the power plug, etc. Using the product with accumulated dust in the interior may cause fire or electric shock.**
- **Never use a water jet, etc. to clean the inside and outside of the cabinet. If wetness occurs for any reason, do not use the product until it has completely dried.**
- **Once a year, request the office shown on this manual or the dealer from whom the product was originally purchased to perform the internal cleaning. Using the product with accumulated dust in the interior may cause fire or other accidents.**
- **Note that you are liable for the cost of cleaning the interior parts.**
- **There is the danger of accidents involving electrical shorts circuits or fire caused by factors such as the deterioration of insulation in electrical and electronic equipment over time. Check that there are no abnormalities such as odors from burning.**

14 TABLE 01 PERIODIC INSPECTION TABLE

PERIOD	ITEM	DESCRIPTION	REFERENCE
As appropriate	Cabinet surface	Cleaning	As Below
	Control unit Surface		
Daily	Cabinet	Confirm that adjusters are in contact with the floor	
Weekly	Control Unit	Aim Test	
	LCD	Screen Cleaning	
		Screen Alignment	
Monthly	Front Cabinet	Speaker volume	
	Controller Cabinet	Check Input devices	
		Check Output devices	
	Controller Unit	Check Speaker Volume	
		Speaker inspection	
		Check each input device	
		Check each output device	
	LED board	LED Inspection	
	Coin Selector	Coin path inspection	
		Coin Insertion Test	
Every 3 Months	Coin Selector	Cleaning	
1 Year	Ringwide	Cleaning	
	Power Cables	Inspection / Cleaning	
	Cabinet Interior	Cleaning	

You can get this game at www.magic-play.eu

You can get this game at www.magic-play.eu

Cleaning the Cabinet Surfaces

When the cabinet surfaces are badly soiled, remove stains with a soft cloth dipped in water or diluted (with water) chemical detergent and squeezed dry. To avoid damaging surface finish, do not use such solvents as thinner, benzine, etc. other than ethyl alcohol, or abrasives, bleaching agent and chemical dustcloth.
Some general-purpose household, kitchen and furniture cleaning products may contain strong solvents that degrade plastic components, coatings, and print. Before using any cleaning product, read the product's cautionary notes carefully and test the product first on a small area that is not highly visible.

You can get this game at www.magic-play.eu

You can get this game at www.magic-play.eu

15 TROUBLESHOOTING

15-1 TROUBLESHOOTING (WHEN NO ERROR MESSAGE IS SHOWN)

⚠WARNING

- This work should be performed by site maintenance personnel or other skilled professionals. Work performed by non-technical personnel can cause a severe accident such as an electric shock. If there are no site maintenance personnel or other skilled professionals available, turn off the power immediately and contact the office given in this manual or from point-of-purchase.
- When working with the product, be sure to turn the power off. Working with the power on may cause and electric shock or short circuit accident.
- In order to prevent electric shock and short circuit, be sure to turn power off before performing work.
- Be careful so as not to damage wirings. Damaged wiring can cause electric shock or short circuit.
- After removing the cause of the functioning of the Circuit Protector, reinstate the Circuit Protector. Depending on the cause of the functioning, using the Circuit Protector as is without removing the cause can cause generation of heat and fire hazard.
- In the event that a problem cannot be resolved by employing the procedures listed in this Manual, be sure to request service from the office shown on this Manual or the dealer from whom the product was originally purchased. Attempts to employ procedures other than those specified in this Manual can cause electrical shock, shorting, or fire.
- In the event of a problem that is not described here, be sure to contact the office shown on this Manual or the dealer from whom the product was originally purchased. Careless attempts at repair can result in electrical shock, shorting, or fire.

STOP IMPORTANT

- If an error message is displayed, identify the cause and without delay take the appropriate countermeasures. Leaving the error unaddresses could result in a breakdown.
- If a problem occurs, first inspect the connection of any wiring connectors.
- Static electricity from your body may damage some electronic devices on the IC board. Before handling any IC board, touch a grounded metallic surface so that static electricity is discharged.

You can get this game at www.magic-play.eu

You can get this game at www.magic-play.eu

If a problem occurs, first check to make sure that the wiring connectors are properly connected.

15 TABLE 01

PROBLEM	CAUSE	COUNTERMEASURES
When the main SW is turned ON, the machine is not activated.	The power is not ON.	Firmly insert the plug into the outlet.
	Incorrect power source/voltage.	Make sure that the power supply/voltage are correct.
	The Fuse on the AC Unit has blown due to momentary over current.	After eliminating the cause of overload, replace the specified rating fuse.
	The fuse of the connect board has blown due to momentary over current.	After eliminating the cause of overload, replace the specified rating fuse.
No sound is generated from the speakers.	Volume not correctly adjusted.	Adjust the sound volume. (see chapter 9)
	Game Bd or Amplifier malfunction.	Call service dept mentioned in this manual.
LCD colour incorrect.	Screen not correctly adjusted	Adjust the screen (see chapter 11)
	VGA cable malfunction	Replace VGA cable
	LCD failure	Call service dept mentioned in this manual.
The controller line of sight is not acceptible.	Sights are not aligned due to changes in the surrounding enviroment	Re-align the sight settings (see chapter 9)
	Sight LED board malfunction.	Check LED bds positioned around the screen - check that all LEDs are lit. *(This can be easily achieved if viewing LED through a digital device i.e camera or camera phone.)*
	Sensor unit malfunction	Replace sensor unit. (see chapter 10)
	LED Board / cover contaminated	Clean both LED covers and LEDs
The controller unit does not to appear to operate correctly.	Microswitch failure.	Check using Input Test (see chapter 9) to establish operation.
	LED board malfunction.	Check LED bds positioned around the screen - check that all LEDs are lit. *(This can be easily achieved if viewing LED through a digital device i.e camera or camera phone.)*
	Sensor Unit malfunction	Replace the Sensor Unit (see chapter 10)

You can get this game at www.magic-play.eu

You can get this game at www.magic-play.eu

16 GAME BOARD (RINGWIDE)

⚠ WARNING

- When working with the product, be sure to turn the power off. Working with the power on may cause an electric shock or short circuit.
- Be careful not to damage the wires. Damaged wires may cause an electric shock, short circuit or present a risk of fire.
- Do not use this product with connectors other than those that were connected and used with the game board at the time of shipping. Do not carelessly connect wires to connectors that were not used at the time of shipping, as this may cause overheating, smoke or fire damage.

⚠ CAUTION

In this product, setting changes are made during the test mode. The game board need not be operated. Use the game board, etc. as is with the same setting made at the time of shipment so as not to cause electric shock and malfunctioning.

STOP IMPORTANT

Static electricity from your body may damage some electronics devices on the IC board. Before handling the IC board, touch a grounded metallic surface so that the static electricity can be discharged.

You can get this game at www.magic-play.eu

You can get this game at www.magic-play.eu

16-1 HANDLING PRECAUTIONS

⚠ WARNING

- To prevent electric shock or IC Board malfunctioning, be sure to turn off the power for the cabinet when installing or removing the IC Board.
- Extraneous matter such as dust on the IC Board can cause the IC Board to generate heat and result in a fire due to short circuit, etc. Ensure the IC Board surfaces are always kept clean.
- Keep the IC board well cooled. RINGWIDE is provided with ventilating fans. Do not block the air outlets of these fans. Also do not place anything closely to RINGWIDE. Failure to observe these instructions may cause an overheating and fire.
- Always follow the usage conditions from SEGA as well as the usage conditions for the cabinet you are using for RINGWIDE. Failure to do so may cause an overheating and fire.

STOP IMPORTANT

- Be sure to connect the IC Board and connectors completely. Insufficient insertion can damage IC Board, etc.
- For the IC Board circuit inspection, only the use of Logic Tester is permitted. The use of ordinary testers is not permitted as these can damage the IC Board.
- Do not subject the IC Board to static electricity when installing the IC Board in the cabinet or when connecting wire harness connectors to the IC Board.
- When soldering buttons, etc. to the wire harnesses, be sure to remove the wire harnesses from the IC Board so as not to subject the IC Board to heat.
- Using RINGWIDE without the Shield Case can cause electric wave trouble. Be sure to use RINGWIDE together with the accessory Shield Case.
- Some parts are the ones designed and manufactured not specifically for this product. The manufacturers may discontinue, or change the specifications of, such general-purpose parts. If this is the case, SEGA cannot repair or replace a failed product whether or not a warranty period has expired.

You can get this game at www.magic-play.eu

You can get this game at www.magic-play.eu

16-2 PARTS DETAILS

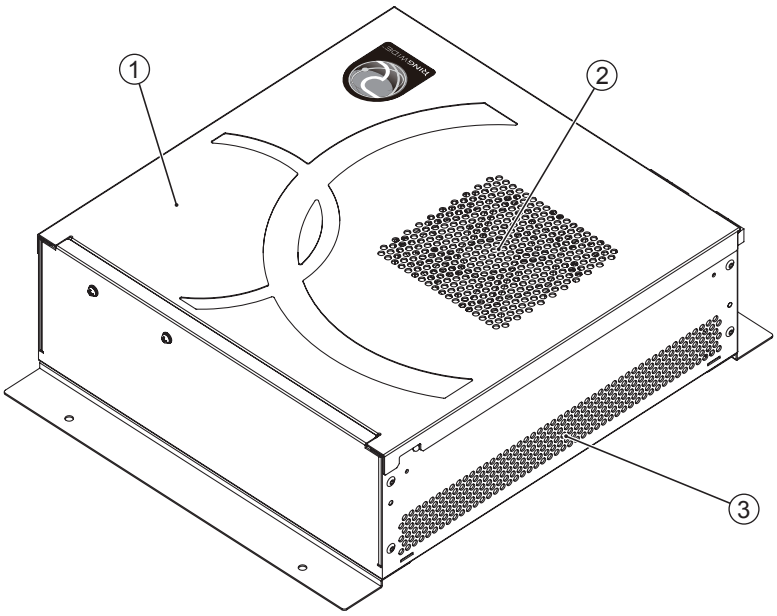

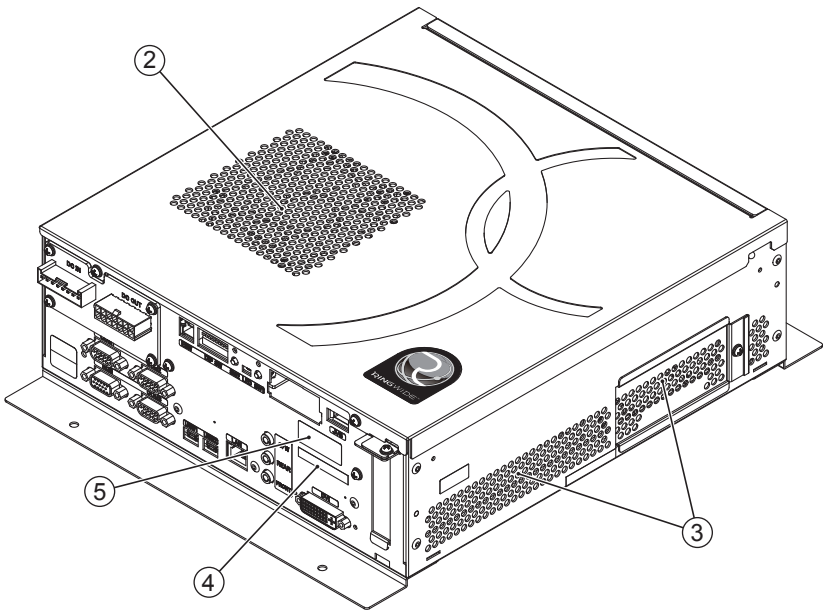

① Shield case
② Exhaust vent (Do not block or cover.)
③ Intake vent (Do not block or cover.)
④ Board number
⑤ Board serial number

You can get this game at www.magic-play.eu

You can get this game at www.magic-play.eu

CONNECTORS, SWITCHES AND LED

⚠ WARNING

- **When connecting the connector, check the orientation and type carefully and connect securely. The connector must be connected in the proper direction and type. If it is connected in the wrong direction or indiscriminately at an incline, or connected wrong connector, so that a load is applied, the connector or its terminal pins could break, causing a short circuit or fire.**
- **Do not connect components to ⑨ JVS I/O that are not designated by SEGA. Connecting unspecified components could cause an accident such as an electric shock or fire.**

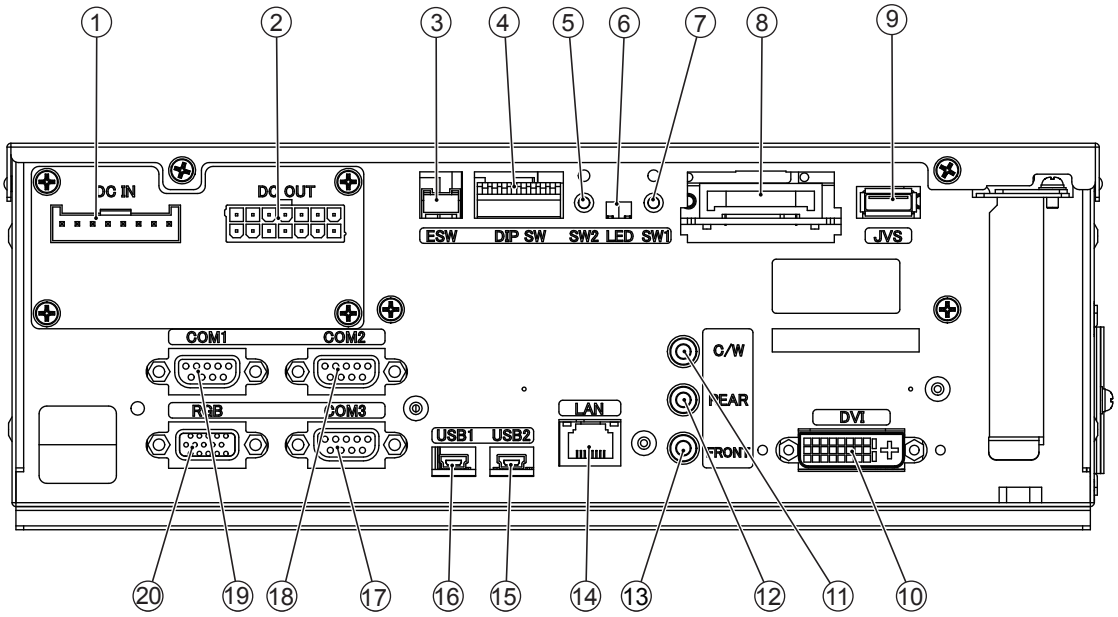

① Power input port
② External power supply port
③ Test/Service button external input port
④ DIP SW (Dip switches)
⑤ Service button (SW2)
⑥ LED1, LED2 (From right to left: 1, 2)
⑦ Test button (SW1)
⑧ Key chip socket
⑨ JVS I/O port
⑩ DVI output
⑪ Center/Woofer lineout
⑫ Rear lineout
⑬ Front lineout
⑭ LAN port
⑮ USB port 2
⑯ USB port 1
⑰ Serial communication port 3
⑱ Serial communication port 2
⑲ Serial communication port 1
⑳ RGB output

You can get this game at www.magic-play.eu

You can get this game at www.magic-play.eu

① Power Input Port

Terminal No.	Signal Name	Terminal No.	Signal Name
1	GND	5	+12V DC IN
2	GND	6	+12V DC IN
3	GND	7	+12V DC IN
4	GND	8	+12V DC IN

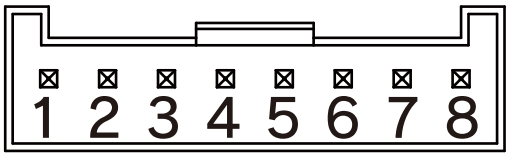

NOTE: Before connecting, be sure to check the type of connector.

② External Power Supply Port

Terminal No.	Signal Name	Terminal No.	Signal Name	Maximum Output Current
1	GND	8	+12V DC	2.3A
2	GND	9	+12V DC	
3	GND	10	+12V DC	
4	GND	11	+5V DC	2.3A
5	GND	12	+5V DC	
6	GND	13	+5V DC	
7	N.C.	14	N.C.	-

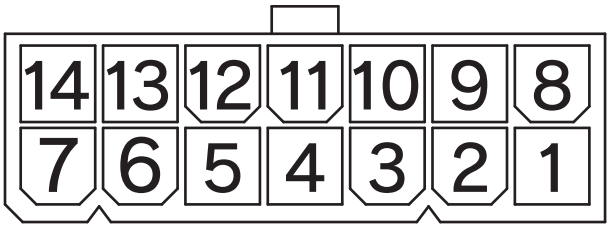

NOTE: Before connecting, be sure to check the type of connector.

③ Test/Service Button External Input Port

Terminal No.	Signal Name
1	SW1
2	SW2
3	GND

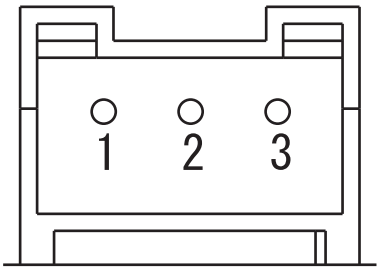

You can get this game at www.magic-play.eu

You can get this game at www.magic-play.eu

④ DIP SW

No. 1, No. 2 and No.3:
Use differs depending on game software. Set according to the Service Manual provided with the game software itself.

No. 4:
Changes the facing of the monitor. Use differs depending on game software. Set according to the Service Manual provided with the game software itself. If no specific directions are given set to horizontal display (OFF).

OFF: Horizontal display
ON: Vertical display

No. 5, No. 6 and No. 7:
Set the resolution of the video output.
Use differs depending on game software. Set according to the Service Manual provided with the game software itself.

Resolution	No. 5	No. 6	No. 7
*	OFF	OFF	OFF
640 x 480	ON	OFF	OFF
1024 x 600	**OFF**	**ON**	**OFF**
1024 x 768	ON	ON	OFF
1280 x 720	OFF	OFF	ON
1280 x 1024	ON	OFF	ON
1360 x 768	OFF	ON	ON
1920 x 1080	ON	ON	ON

For OPERATION GHOST the resolution is 1024 x 600

No. 8:
Use differs depending on game software. Set according to the Service Manual provided with the game software itself.

The diagram below shows the setting for OPERATION GHOST

No. 1	No. 2	No. 3	No. 4	No. 5	No. 6	No. 7	No. 8
OFF	OFF	OFF	OFF	OFF	ON	OFF	OFF

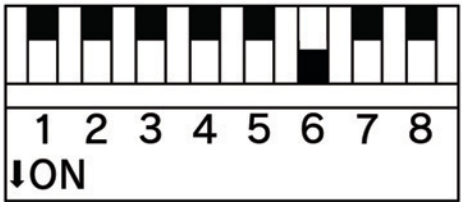

You can get this game at www.magic-play.eu

You can get this game at www.magic-play.eu

16-3 RINGWIDE COMPONENTS

■ **ACCESSORIES**

Parts not labeled with part numbers are as yet unregistered or cannot be registered. Be sure to handle all parts with care, as some parts are not available for purchase separately.

DESCRIPTION/PART NO.	FIGURES/NOTES	QTY
TAPPING SCREW 011-P00412	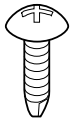 Used for installing the RINGWIDE.	4
RINGWIDE 847-0001D-01 : USA 847-0001D-02 : OTHERS 847-0001D-03 : CHINA	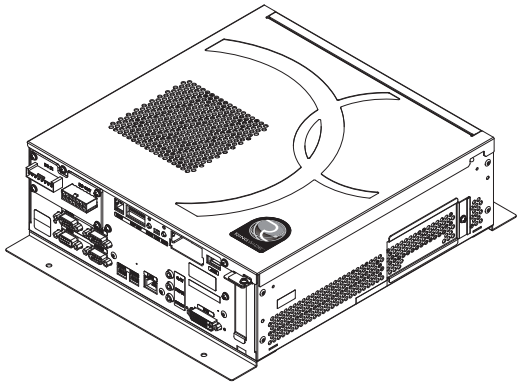	1 ea.

You can get this game at www.magic-play.eu

You can get this game at www.magic-play.eu

16-4 ERROR CODES DISPLAY

⚠ WARNING

- **If an error code is displayed get on-site maintenance personnel or other qualified professional to look at it. An unqualified person attempting to resolve an error code problem may lead to electric shock, short circuit and risk of fire.**

  If no on-site maintenance personnel or qualified professional is available immediately turn off the power and contact the customer services in this manual or your supplier.
- **If a problem not described in this manual occurs, or the resolution to a problem described in this manual is not effective, do not make further attempts to resolve the problem yourself. Immediately turn off the power and contact the office listed in this manual or your supplier. Any unguided attempts to solve such problems may lead to a serious accident.**

STOP IMPORTANT

If an error number or message not listed below appears, cease using the product immediately and contact the office listed in this manual or the point of purchase for this product.

RINGWIDE is equipped to display various errors on-screen to help solve any problems. If an error is displayed the game cannot be used. Use the following table of causes and countermeasures to solve the problem.

DISPLAY	Error 0001 Keychip Not Found
CAUSE	There is no key chip, or the key chip is not connected correctly.
COUNTERMEASURES	Check that the key chip is connected correctly.

DISPLAY	Error 0002 Keychip Not Available
CAUSE	The key chip is not supported. The RINGWIDE system program must be updated.
COUNTERMEASURES	Check how the game was installed. If that doesn't fix the problem, contact the office listed in this manual or the point of purchase for this product.

DISPLAY	Error 0004 Game Program Not Acceptable
CAUSE	The key chip is not supported.
COUNTERMEASURES	Check that the key chip from a different system is not inserted. If that doesn't fix the problem, contact the office listed in this manual or the point of purchase for this product.

You can get this game at www.magic-play.eu

You can get this game at www.magic-play.eu

DISPLAY	Error 0008 Keychip Access Failed
CAUSE	The key chip could not be accessed.
COUNTERMEASURES	Reinsert the key chip and restart RINGWIDE. If that doesn't fix the problem, contact the office listed in this manual or the point of purchase for this product.

DISPLAY	Error 0010 Unexpected Game Program Failure
CAUSE	The game program crashed due to an unexpected error.
COUNTERMEASURES	Turn the power off and then restart the RINGWIDE. If that doesn't fix the problem, contact the office listed in this manual or the point of purchase for this product.

DISPLAY	Error 0020 EXIO Not Found
CAUSE	The I/O board inside RINGWIDE is not recognized.
COUNTERMEASURES	Turn the power off and then restart the RINGWIDE. If that doesn't fix the problem, contact the office listed in this manual or the point of purchase for this product.

DISPLAY	Error 0021 Main board Malfunctioning
CAUSE	The main board does not recognize itself.
COUNTERMEASURES	Contact the office listed in this manual or the point of purchase for this product.

DISPLAY	Error 0022 Game Program Not Found on Storage Device
CAUSE	There is no game program on the storage device.
COUNTERMEASURES	Use the installation media (DVD DRIVE, etc.) to reinstall the game.

DISPLAY	Error 0023 - 0026 Main board Malfunctioning
CAUSE	Failed to access the main board.
COUNTERMEASURES	Turn the power off and then restart the RINGWIDE. If that doesn't fix the problem, contact the office listed in this manual or the point of purchase for this product.

DISPLAY	Error 0027 Low Battery
CAUSE	The button battery may be depleted.
COUNTERMEASURES	Replace the button battery.

DISPLAY	Error 0041 Game Program Not Found on Install Media
CAUSE	There is no game program on the install media.
COUNTERMEASURES	Check that the game program, place on the install media (DVD DRIVE etc.), and the key chip correspond to each other.

You can get this game at www.magic-play.eu

You can get this game at www.magic-play.eu

DISPLAY	Error 0042 Game Program Not Found on Install Media
CAUSE	Some part of the game program is missing.
COUNTERMEASURES	Check how the game was installed. If that doesn't fix the problem, contact the office listed in this manual or the point of purchase for this product.

DISPLAY	Error 0049 Install Media Access Failed
CAUSE	Failed to access the install media.
COUNTERMEASURES	Check that the install media (DVD DRIVE etc.) is connected correctly. Check that the game disk is not scratched, damaged or dirty. If that doesn't fix the problem, contact the office listed in this manual or the point of purchase for this product.

DISPLAY	Error 0052 Install Media Access Failed
CAUSE	Failed to access the install media.
COUNTERMEASURES	Check that the install media (DVD DRIVE etc.) is connected correctly. Check that the game disk is not scratched, damaged or dirty. If that doesn't fix the problem, contact the office listed in this manual or the point of purchase for this product.

DISPLAY	Error 0055 Game Program Verify Error
CAUSE	The installed game program is not working correctly.
COUNTERMEASURES	Turn the power off and then restart the RINGWIDE. If that doesn't fix the problem, contact the office listed in this manual or the point of purchase for this product.

DISPLAY	Error 0064 Game Program Not Found on Server
CAUSE	No game program on the LAN install server.
COUNTERMEASURES	Check that the game program, place on the LAN install server, and the key chip correspond to each other.

DISPLAY	Error 0066 Game Program Verify Error
CAUSE	The installed game program is not working correctly.
COUNTERMEASURES	Turn the power off and then restart the RINGWIDE. If that doesn't fix the problem, contact the office listed in this manual or the point of purchase for this product.

DISPLAY	Error 0081 Invalid Storage Format
CAUSE	The storage format is wrong.
COUNTERMEASURES	Contact the office listed in this manual or the point of purchase for this product.

You can get this game at www.magic-play.eu

You can get this game at www.magic-play.eu

DISPLAY	Error 0082 Game Program Access Failed
CAUSE	The storage device cannot be recognized.
COUNTERMEASURES	Reinstall the game program. If that doesn't fix the problem, contact the office listed in this manual or the point of purchase for this product.

DISPLAY	Error 0083 Storage Device Not Acceptable
CAUSE	The storage does not have enough space.
COUNTERMEASURES	Contact the office listed in this manual or the point of purchase for this product.

DISPLAY	Error 0084 Storage Device Malfunctioning
CAUSE	The storage device may be broken.
COUNTERMEASURES	Turn the power off and then restart the RINGWIDE. If that doesn't fix the problem, contact the office listed in this manual or the point of purchase for this product.

DISPLAY	Error 0085 Invalid Storage Format
CAUSE	The storage format is wrong.
COUNTERMEASURES	Contact the office listed in this manual or the point of purchase for this product.

DISPLAY	Error 0088 System Program Verify Error
CAUSE	The installed system program is not working correctly.
COUNTERMEASURES	Perform a manual recovery of RINGWIDE. If that doesn't fix the problem, contact the office listed in this manual or the point of purchase for this product.

DISPLAY	Error 0090 High CPU Temperature
CAUSE	The CPU temperature is high.
COUNTERMEASURES	Refer to Chapter 7, and clean RINGWIDE. If that doesn't fix the problem, contact the office listed in this manual or the point of purchase for this product.

DISPLAY	Error 0091 Too High CPU Temperature
CAUSE	The CPU temperature is high.
COUNTERMEASURES	Refer to Chapter 7, and clean RINGWIDE. If that doesn't fix the problem, contact the office listed in this manual or the point of purchase for this product.

DISPLAY	Error 0501 - 0530 (No message)
CAUSE	The connected device cannot be recognized.
COUNTERMEASURES	Turn the power off and then restart the RINGWIDE. If that doesn't fix the problem, contact the office listed in this manual or the point of purchase for this product.

You can get this game at www.magic-play.eu

You can get this game at www.magic-play.eu

DISPLAY	Error 0531 (No message)
CAUSE	The connected graphics device cannot be recognized.
COUNTERMEASURES	Turn the power off and then restart the RINGWIDE. If that doesn't fix the problem, contact the office listed in this manual or the point of purchase for this product.

DISPLAY	Error 0532 (No message)
CAUSE	The connected USB device cannot be recognized.
COUNTERMEASURES	Check that the USB devices are connected correctly, and turn the power off and then restart the RINGWIDE. If that doesn't fix the problem, contact the office listed in this manual or the point of purchase for this product.

DISPLAY	Error 0533 - 0550 (No message)
CAUSE	The connected device cannot be recognized.
COUNTERMEASURES	Turn the power off and then restart the RINGWIDE. If that doesn't fix the problem, contact the office listed in this manual or the point of purchase for this product.

DISPLAY	Error 0901 Wrong Platform
CAUSE	The game board being used is not supported.
COUNTERMEASURES	Check to see if any game programs have been upgraded.

DISPLAY	Error 0902 Wrong System Program
CAUSE	It was started up with an unsupported system program. The RINGWIDE system program must be updated.
COUNTERMEASURES	Check how the game was installed. If that doesn't fix the problem, contact the office listed in this manual or the point of purchase for this product.

DISPLAY	Error 0903 Wrong Region.
CAUSE	The game is for a foreign region.
COUNTERMEASURES	Use a domestic game.

DISPLAY	Error 0905 Graphic Function Not Found
CAUSE	The RINGWIDE graphics function cannot be recognized.
COUNTERMEASURES	Check that the game program is compatible with the RINGWIDE. If it is, contact the office listed in this manual or the point of purchase for this product.

You can get this game at www.magic-play.eu

You can get this game at www.magic-play.eu

DISPLAY	Error 0906 Sound Function Not found
CAUSE	The RINGWIDE sound function cannot be recognized.
COUNTERMEASURES	Contact the office listed in this manual or the point of purchase for this product.

DISPLAY	Error 0907 Not Enough System Memory
CAUSE	RINGWIDE does not have enough memory.
COUNTERMEASURES	Contact the office listed in this manual or the point of purchase for this product.

DISPLAY	Error 0908 Not Enough SRAM
CAUSE	RINGWIDE does not have enough SRAM.
COUNTERMEASURES	Contact the office listed in this manual or the point of purchase for this product.

DISPLAY	Error 0909 Not Enough Storage Device
CAUSE	RINGWIDE does not have enough storage.
COUNTERMEASURES	Contact the office listed in this manual or the point of purchase for this product.

DISPLAY	Error 0910 Wrong Resolution Setting
CAUSE	The game does not support the current resolution settings.
COUNTERMEASURES	Change the DIP SW to the correct settings and restart the RINGWIDE.

DISPLAY	Error 0911 Wrong Horizontal/Vertical Setting.
CAUSE	The monitor horizontal/vertical settings are incorrect.
COUNTERMEASURES	Change the DIP SW to the correct settings and restart the RINGWIDE.

DISPLAY	Error 0949 Keychip Not Found
CAUSE	Failed to access the key chip.
COUNTERMEASURES	Check that the key chip is connected correctly.

DISPLAY	Error 6401 JVS I/O board is not connected to main board.
CAUSE	(1) The I/O board is not connected. (2) Unreliable connection between the game board and the I/O board.
COUNTERMEASURES	(1) Connect the I/O board to RINGWIDE. Check that the power cable is connected to I/O board. (2) Reconnect or replace the JVS cable that connects the I/O board to RINGWIDE.

DISPLAY	Error 6402 JVS I/O board does not fulfill the game spec.
CAUSE	The correct I/O board is not connected.
COUNTERMEASURES	Use an I/O board that provides the proper input/output for the game.

You can get this game at www.magic-play.eu

You can get this game at www.magic-play.eu

DISPLAY	Error 8001 Network address error (DHCP)
CAUSE	The network connection settings could not be initialized.
COUNTERMEASURES	Check the network connection and follow the startup procedures to restart the system.

DISPLAY	Error 8002 Network setting error (SYSTEM)
CAUSE	The SYSTEM TEST MODE NETWORK SETTING is incorrect.
COUNTERMEASURES	Check the NETWORK SETTING.

DISPLAY	Error 8003 Network address error (Dup.IP)
CAUSE	The network connection settings could not be initialized.
COUNTERMEASURES	Check the network connection and follow the startup procedures to restart the system.

DISPLAY	Error 8004 Network setting error (Dup.IP)
CAUSE	The SYSTEM TEST MODE NETWORK SETTING is incorrect.
COUNTERMEASURES	Check the NETWORK SETTING.

DISPLAY	Error 8005 Network type error (WAN)
CAUSE	The line type of the connected ALL.Net router is incorrect.
COUNTERMEASURES	Check the line type of the connected ALL.Net router.

DISPLAY	Error 8006 Network timeout error (DHCP)
CAUSE	The network connection settings could not be initialized.
COUNTERMEASURES	Check the network connection and follow the startup procedures to restart the system.

DISPLAY	Error 8007 Network timeout error (DNS-WAN)
CAUSE	A connection could not be established with ALL.Net.
COUNTERMEASURES	Check the RINGWIDE network connection, the in-store network connection and the connection between the ALL.Net router and the network cable, and then follow the startup procedures to restart the system. If the error persists, check the maintenance information.

DISPLAY	Error 8008 Network timeout error (DNS-LAN)
CAUSE	A connection could not be established with the ALL.Net router.
COUNTERMEASURES	Check the RINGWIDE network connection and the in-store network ALL.Net connection and then follow the startup procedures to restart the system.

DISPLAY	Error 8009 Network Game Disabled
CAUSE	The GAME TEST MODE ALL.Net connection is set to OFF.
COUNTERMEASURES	Check the GAME TEST MODE settings.

You can get this game at www.magic-play.eu

You can get this game at www.magic-play.eu

DISPLAY	Error 8103 ALL.Net System error (TIMEOUT)
CAUSE	A connection could not be established with ALL.Net.
COUNTERMEASURES	Check the RINGWIDE network connection, the in-store network connection and the connection between the ALL.Net router and the network cable, and then follow the startup procedures to restart the system. If the error persists, check the maintenance information.

DISPLAY	Error 8104 ALL.Net System error (REG)
CAUSE	ALL.Net registration could not be confirmed.
COUNTERMEASURES	Check to make sure ALL.Net registration (the agreement) has been successfully completed.

DISPLAY	Error 8106 ALL.Net System Caution
CAUSE	A connection could not be established with ALL.Net.
COUNTERMEASURES	Check the RINGWIDE network connection, the in-store network connection and the connection between the ALL.Net router and network cable, and then follow the startup procedures to restart the system. If the error persists, check the maintenance information.

DISPLAY	Error 8111 ALL.Net System error (REG)
CAUSE	ALL.Net registration could not be confirmed.
COUNTERMEASURES	Check to make sure ALL.Net registration (the agreement) has been successfully completed.

DISPLAY	Error 8113 ALL.Net System error (MODE)
CAUSE	The ALL.Net settings could not be confirmed.
COUNTERMEASURES	Contact the office listed in this manual.

DISPLAY	Error 8114 ALL.Net System error (RTC)
CAUSE	A connection could not be established with ALL.Net.
COUNTERMEASURES	Check the RINGWIDE network connection, the in-store network connection and the connection between the ALL.Net router and the network cable, and then follow the startup procedures to restart the system. If the error persists, check the maintenance information.

DISPLAY	Error 8201 ALL.Net System error (TIMEOUT)
CAUSE	A connection could not be established with ALL.Net.
COUNTERMEASURES	Check the RINGWIDE network connection, the in-store network connection and the connection between the ALL.Net router and network cable, and then follow the startup procedures to restart the system. If the error persists, check the maintenance information.

You can get this game at www.magic-play.eu

You can get this game at www.magic-play.eu

DISPLAY	Error 8202 ALL.Net System error (REG)
CAUSE	ALL.Net registration could not be confirmed.
COUNTERMEASURES	Check to make sure ALL.Net registration (the agreement) has been successfully completed.

DISPLAY	Error 8301 Network error (GAME-LAN)
CAUSE	The connection with the devices that make up this game could not be confirmed.
COUNTERMEASURES	Check the network connection and follow the startup procedures to restart the system.

DISPLAY	Error 8302 Maintenance time (GAME)
CAUSE	Currently the server is undergoing maintenance.
COUNTERMEASURES	Wait until server maintenance is complete.

DISPLAY	Error 8303 Network error (GAME)
CAUSE	A connection could not be established with ALL.Net.
COUNTERMEASURES	Check the RINGWIDE network connection, the in-store network connection and the connection between the ALL.Net router and the network cable, and then follow the startup procedures to restart the system. If the error persists, check the maintenance information.

DISPLAY	Error 8304 Network failed (GAME)
CAUSE	Automatic recovery from the network failure is not possible.
COUNTERMEASURES	Check the RINGWIDE network connection, the in-store network connection and the connection between the ALL.Net router and the network cable, and then follow the startup procedures to restart the system. If the error persists, check the maintenance information.

You can get this game at www.magic-play.eu

You can get this game at www.magic-play.eu

Other ERROR codes.

DISPLAY	Error 1000 Force Feedback Error
CAUSE	Failed to initialise motor controller during power on cycle.
COUNTERMEASURES	Check all connection to and from Motor Controller. Possible failure of Motor Controller PCB. Replace and restart.

DISPLAY	<TICKET ERROR> PLEASE CONTACT OPERATOR
CAUSE	Ticket has jammed or tickets are empty.
COUNTERMEASURES	Clear ticket jam. Refloat with new tickets. Note: When resetting the error message, please take note of the number of tickets owed to the player as this number of tickets cannot be recalled.

DISPLAY	,<NETWORK FAILURE> PLEASE CONTACT OPERATOR
CAUSE	Communication failure across the network.
COUNTERMEASURES	Check all network cables for damage. Check all network connections to Hub. Check Hub for power. Possible Hub failure.

DISPLAY	<NETWORK FAILURE> <CABINET ID CONFLICT> PLEASE CONTACT OPERATOR
CAUSE	Incorrect values given to individual cabinets across the network.
COUNTERMEASRES	See chapter 9-3-4 on setting cabinet identifications

You can get this game at www.magic-play.eu

You can get this game at www.magic-play.eu

Manual Recovery

Use the following procedure to return the RINGWIDE system software to a previous state.

1 Press the TEST and SERVICE Buttons simultaneously with the RINGWIDE power off.
Hold the buttons down and turn on the power.

2 After RINGWIDE starts up and the following message is displayed, release the buttons.
The system software will recover automatically. The Advertising screen will be displayed once everything finishes.
Until it is displayed, do not interfere with the cabinet's operations.
(If you are uninstalling a game, the Install Wait screen will be displayed.)

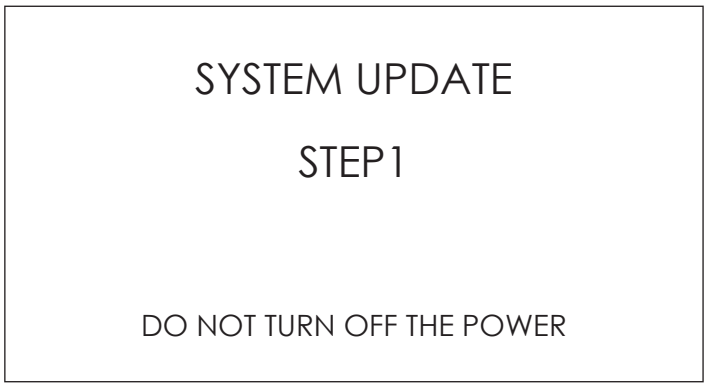

You can get this game at www.magic-play.eu

You can get this game at www.magic-play.eu

16-5 REPLACING THE BUTTON BATTERY

⚠ WARNING

- Make sure you do not damage the printed board and wires. Such damage can lead to electric shock, short circuit and fire hazard.
- To prevent overheating, explosion, or fire:
  - Do not recharge, disassemble, heat, incinerate, or short the battery.
  - Do not allow the battery to come into direct contact with metallic objects or other batteries.
  - To preserve the battery, wrap it in tape or other insulating material.
- Follow local regulations when disposing of the battery. Improper disposal can damage the environment.
- Even the site maintenance personnel or other qualified professionals must not perform replacement operations for parts not described in this manual. In the event that such work is required either contact the office listed in this manual or first confirm the procedure with the place or office of purchase. Failure to do so may lead to electric shock or short circuit.
- Do not turn on the power with current carrying parts exposed. Doing so could result in electric shock or short circuit.

⚠ CAUTION

To avoid risk of malfunction and damage:

- Make sure the positive and negative ends are aligned correctly.
- Use only batteries approved for use with this unit.

STOP IMPORTANT

- The batteries in RINGWIDE can be used for approximately 4 years of standard usage. If the battery appears to require replacement sooner than 4 years it is more likely that an error has occurred with some other part of the board. Rather than exchanging the battery requesting repair of the board itself may be more appropriate.
- Static electricity from your body may damage some electronics devices on the IC board. Before handling the IC board, touch a grounded metallic surface so that the static electricity can be discharged.

You can get this game at www.magic-play.eu

You can get this game at www.magic-play.eu

The button battery that require replacement can be found on the main board, inside the RINGWIDE shield case.

1 Remove the unit on which RINGWIDE is placed from the game cabinet.
RINGWIDE must be removed still attached to the base (wooden shelf, etc.).

2 Remove 2 screws for the RINGWIDE lid. The screws are on top of the connector side.

3 Slide the lid toward the side with the connectors, and remove it.

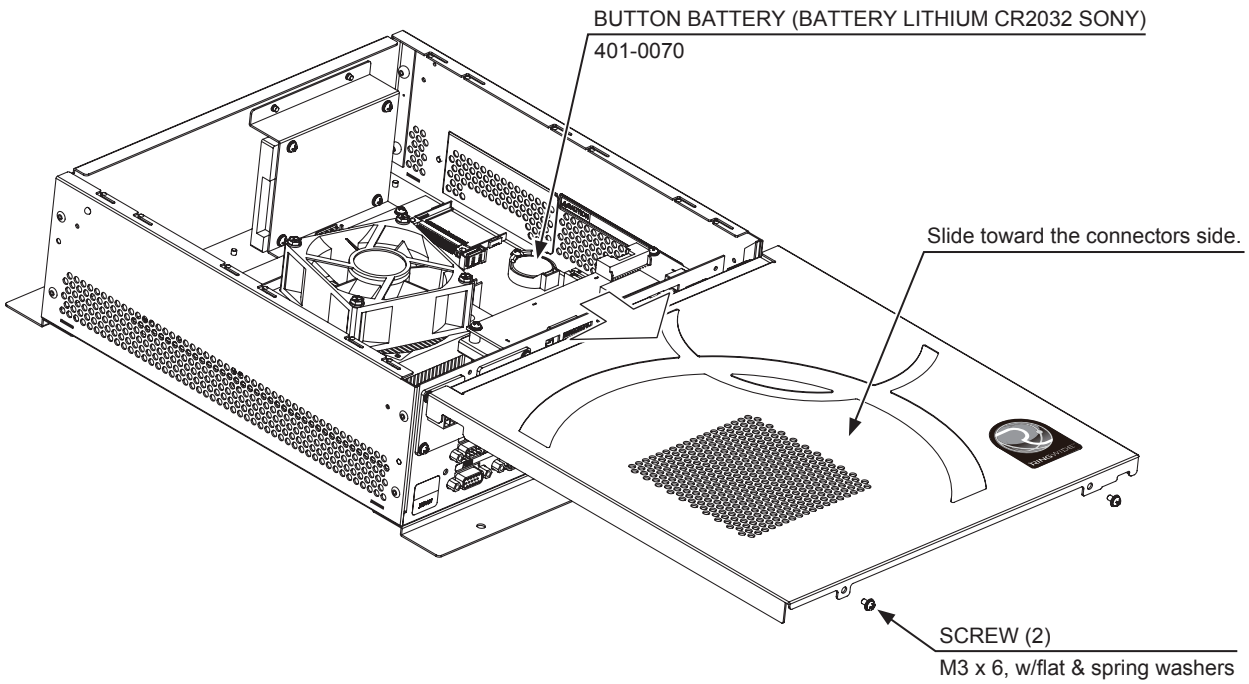

4 The main board is the board on the bottom of the RINGWIDE shield case. After replacing the main board's button battery, refer to Step 3 and close the lid.

You can get this game at www.magic-play.eu

You can get this game at www.magic-play.eu

16-6 CLEANING RINGWIDE

STOP IMPORTANT

- **Clean RINGWIDE once a year or whenever either "Error 0090" or "Error 0091" occurs. Dust accumulating in game boards may not function properly.**
- **Set each cabinet to correct settings after cleaning the product. Be sure to set RINGWIDE to correct settings when returning. If the proper settings are not used, the units may not function properly.**

Once a year remove RINGWIDE from the cabinet and use a vacuum cleaner to clean around the RINGWIDE's air vents and installation area.

1 Refer to the manual included with the game machine, and remove RINGWIDE from the cabinet.

2 Clean around the intake/exhaust vents of RINGWIDE with a vacuum cleaner.

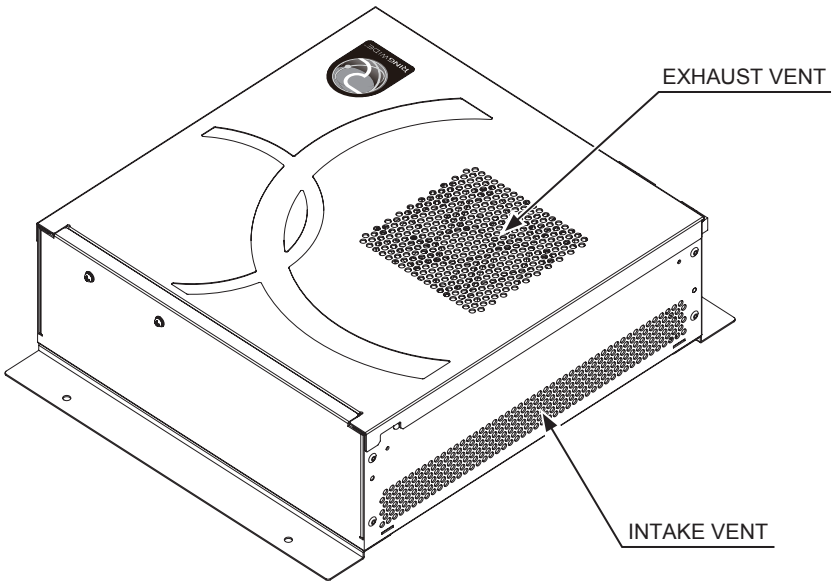

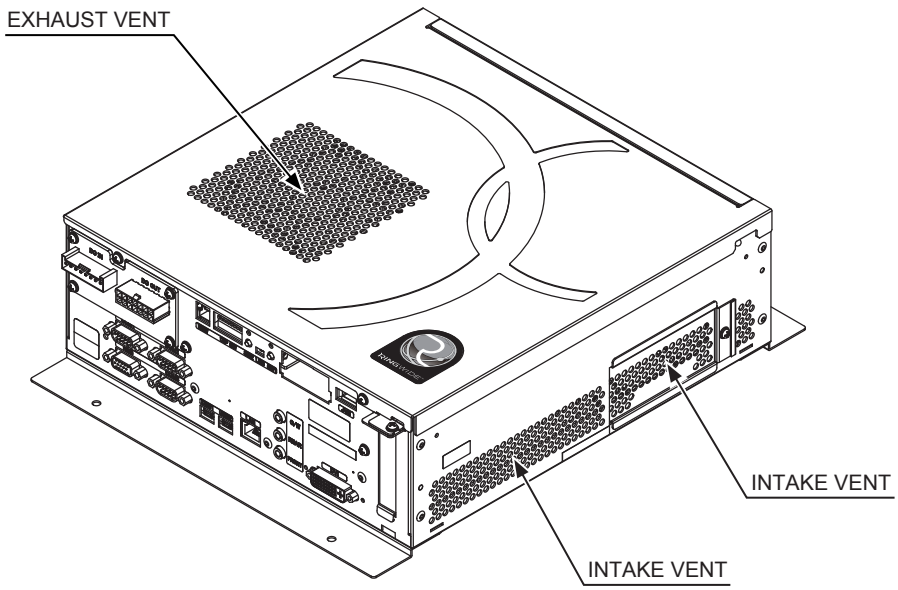

You can get this game at www.magic-play.eu

You can get this game at www.magic-play.eu

3 Clean around installment parts of RINGWIDE in the cabinet with a vacuum cleaner.
Be sure not to damage wirings and boards. Electronic devices on boards may damage by static electricity, and be sure not to vacuum electronic devices by a vacuum cleaner.

4 Set each RINGWIDE you removed by the reverse method.

You can get this game at www.magic-play.eu

You can get this game at www.magic-play.eu

16-7 GAME BOARD (RINGWIDE) LOCATION AND REMOVAL

⚠ WARNING

• When returning the game board after making repairs or replacements, make sure that there are no errors in the connection of connectors. Erroneous connections can lead to electrical shock, short circuits or fires.

• When connecting a connector, check the direction carefully. Connectors must be connected in only one direction. If indiscriminate loads are applied in making connections, the connector or its terminal fixtures could be damaged, resulting in electrical shock, short circuits or fires.

1 The machine is fitted with a Ringwide Game Board and several other Ancilliary Boards which are mainly housed inside the Main Cabinet. To gain access, unlock and remove the side service door.

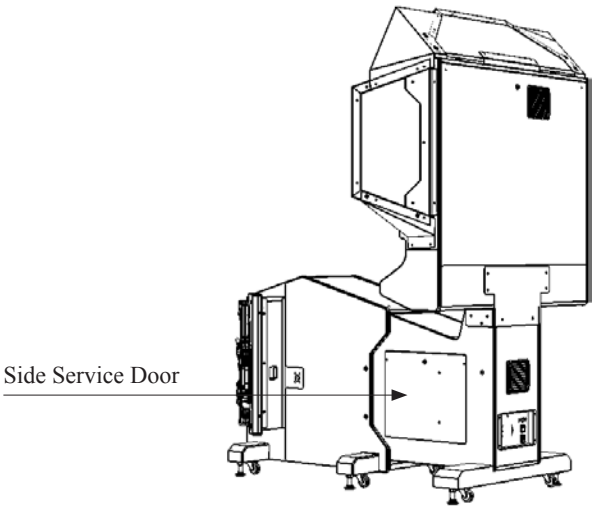

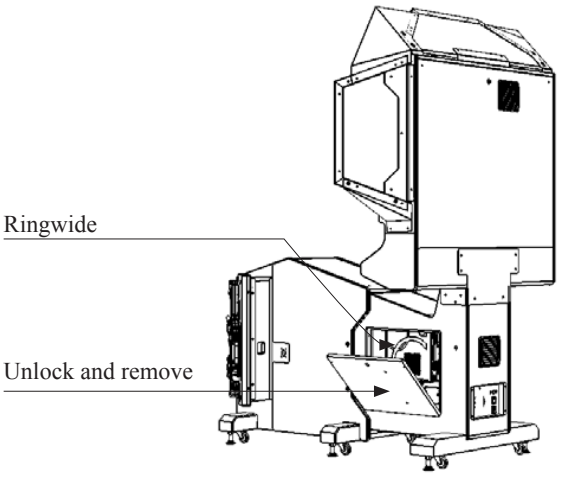

You can get this game at www.magic-play.eu

You can get this game at www.magic-play.eu

2 Remove the upper service panel. This is required to gain access to the rear fixings which support the rear of the Ringwide Game Board.

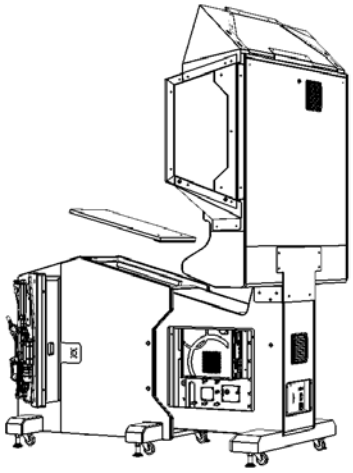

3 Disconnect all the connections to Ringwide.

Note:
When disconnecting connectors always pull buy the connector housing and never the wires

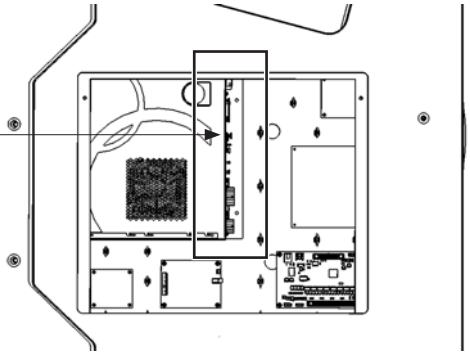

4 From the top access point remove the M4x16 M SCR (2) from the rear of the Ringwide.

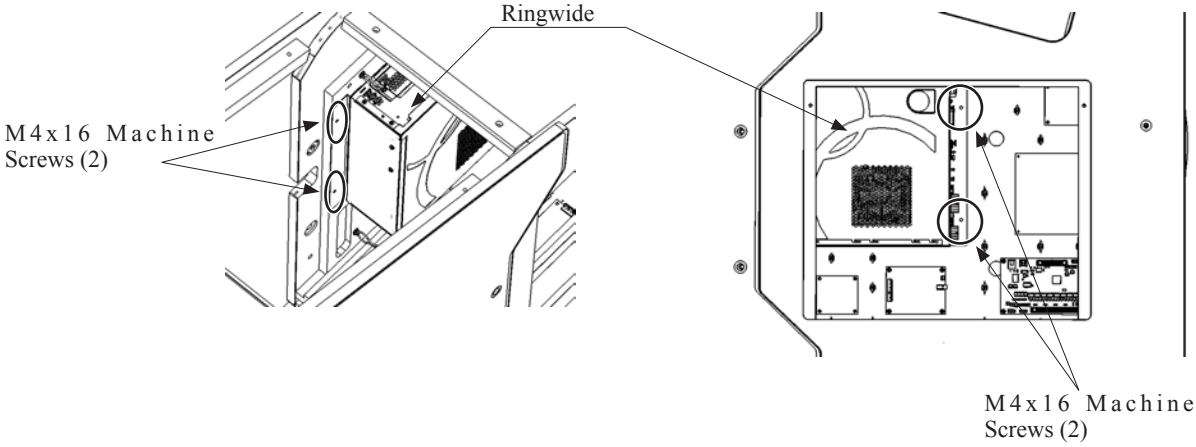

You can get this game at www.magic-play.eu

You can get this game at www.magic-play.eu

⚠ CAUTION

When removing Ringwide from the inside of the cabinet, be carefull and not to trap your fingers or hands.

Make sure that there is room for your hands / fingers to pass through the opening whilst holding Ringwide.

5 Support the Ringwide whilst removing the final fixings. Once all fixings have been removed and all harnesses have been disconnected, carefully remove Ringwide from the cabinet.

Note:
Hold Ringwide by the TOP and BOTTOM of the casing. Holding Ringwide by the sides my cause a fingertrap whilst removing from the cabinet.

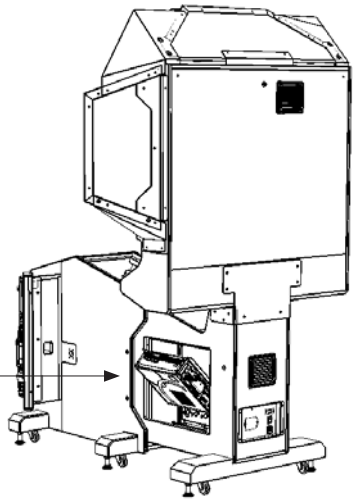

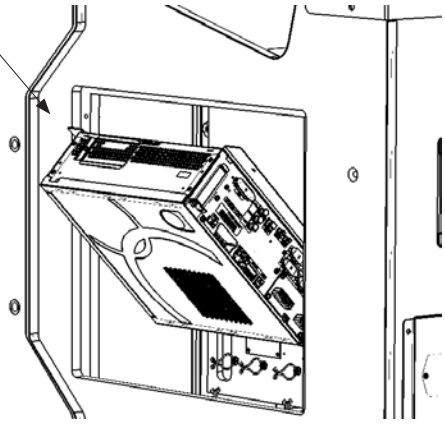

⚠ CAUTION

Do not open the Game Board without the express permission of SEGA. If for any reason entry has been gained into the Game Board without the permission of SEGA, then all warranty rights become void.

When returning the Game Board to SEGA for service, then please make sure that adequate packaging is used as damage in transit make occur.

You can get this game at www.magic-play.eu

You can get this game at www.magic-play.eu

17 FUSES AND FUSE REPLACEMENT

⚠ WARNING

- **In case fuse replacements other than those stated in this manual are necessary, contact where you purchased the product from for inquiries regarding this matter.**
- **In order to prevent an electric shock, be sure to turn power off and unplug from the socket outlet before performing work by touching the internal parts of the product.**
- **Be careful not to damage the cable. Damaged cables may cause electric shock or short circuit or present a fire risk.**
- **Be sure to use fuses meeting specified rating. Using fuses exceeding the specified rating can cause fire and electric shock accidents.**
- **After eliminating the cause of the blowing of fuse, replace the fuse. Depending on the cause of fuse blowing, continued use with the fuse as is blown can cause generation of heat and fire hazard.**

⚠ CAUTION

For continued protection against risk of fire, replace only with the same type of fuse having the same electrical ratings.

17-1 CONTROLLER AND LED FUSE REPLACEMENT

1 Unlock the side service door to gain access to the fuses.

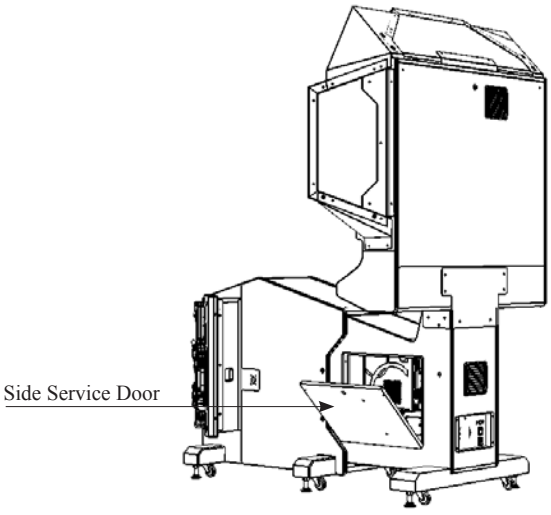

You can get this game at www.magic-play.eu

You can get this game at www.magic-play.eu

2 Unlock the side service door to gain access to the fuses.

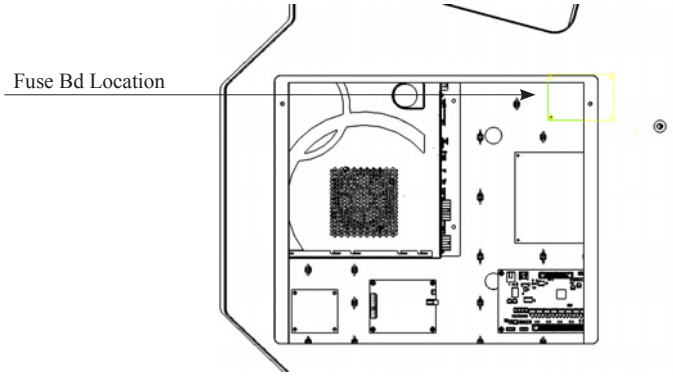

3 Identify the fuse to replace and replace with the same type and value. Failing to replace with the same type and value will cause component damage and may cause a fire.

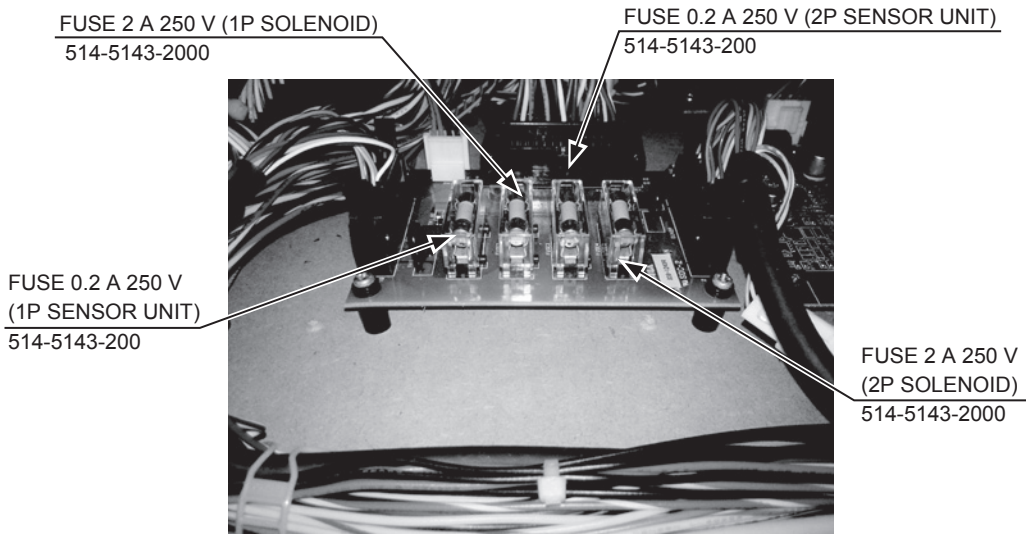

You can get this game at www.magic-play.eu

You can get this game at www.magic-play.eu

17-2 MAIN FUSE REPLACEMENT

⚠ CAUTION

For continued protection against risk of fire, replace only with the same type of fuse having the same electrical ratings.

1 Open the fuse compartment drawer to view the main power fuse. Inside the drawer there are two compartments (a front compartment and a rear compartment). The rear compartment contains the Main power fuse wheras the front campartment contains a spare fuse.

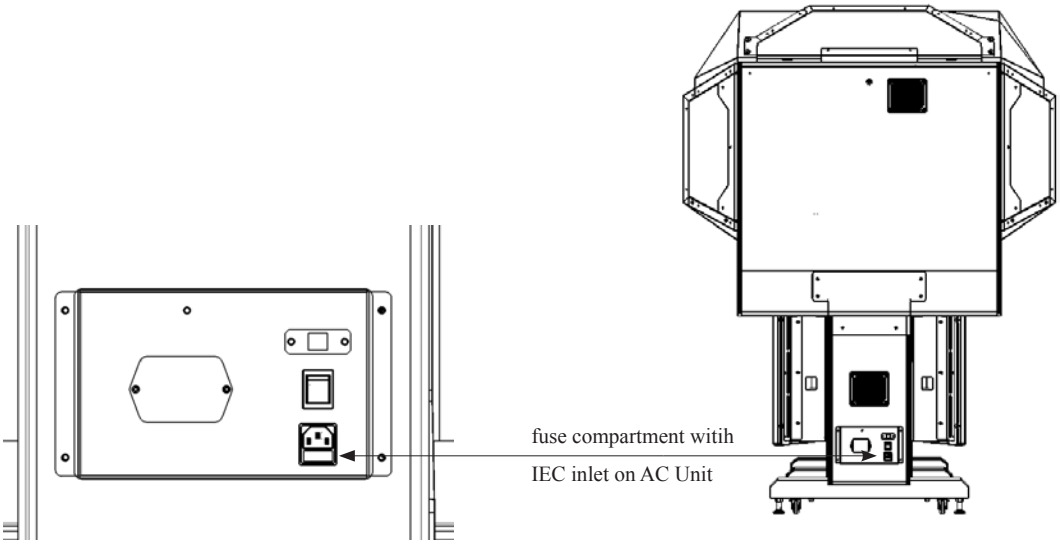

2 Open the fuse compartment drawer to view the main power fuse. Inside the drawer there are two compartments (a front compartment and a rear compartment). The rear compartment contains the Main power fuse wheras the front campartment contains a spare fuse.

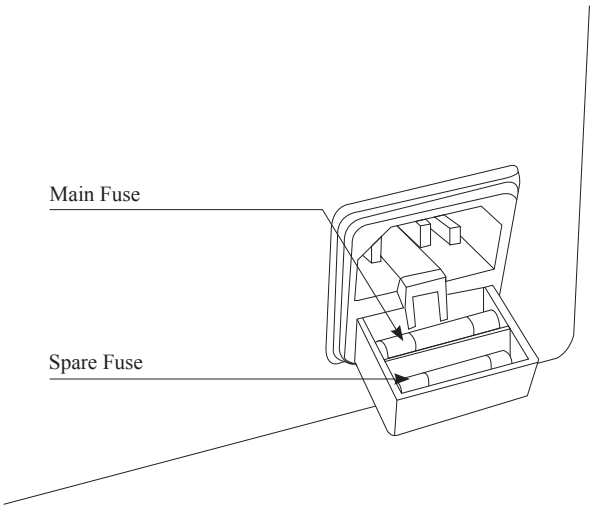

You can get this game at www.magic-play.eu

You can get this game at www.magic-play.eu

17-3 AC DISTRIBUTION FUSE BD

1 Unlock the side service door to gain access to the Auxillary Fuse Bd

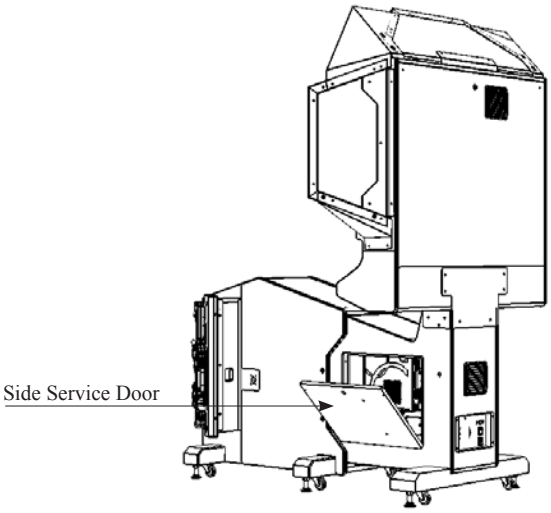

2 Locate the Distribution PCB and replace fuse with the correct value and type..

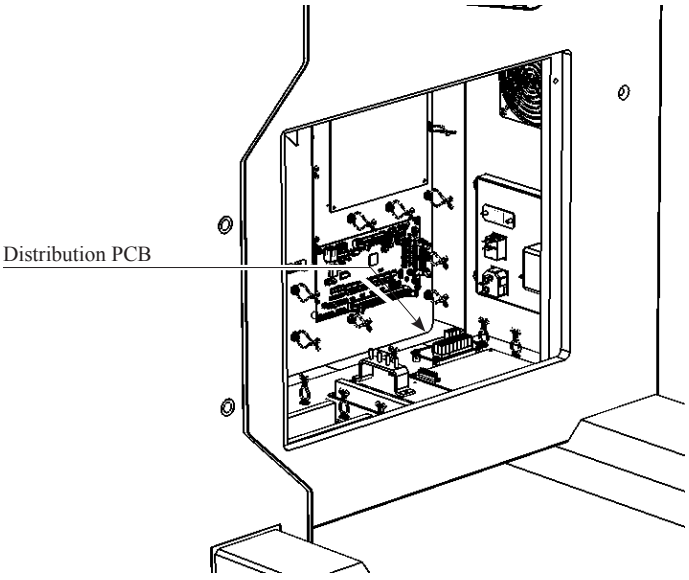

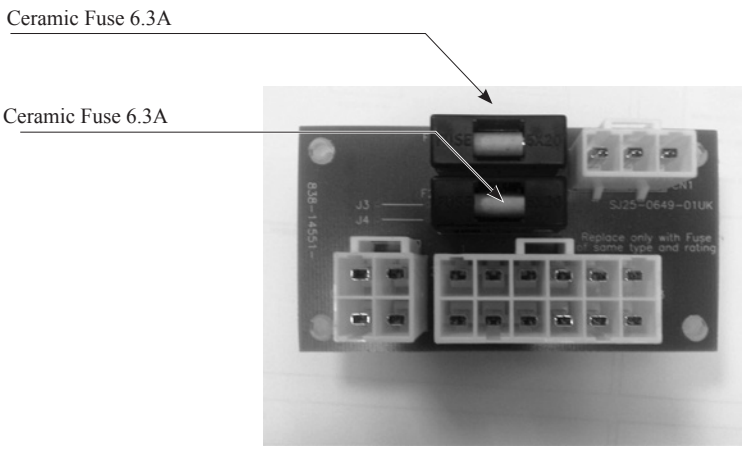

You can get this game at www.magic-play.eu

You can get this game at www.magic-play.eu

18 DESIGN-RELATED PARTS

For the warning display stickers, refer to Section 1.

You can get this game at www.magic-play.eu

You can get this game at www.magic-play.eu

19 PARTS LIST

ASSY STRUCTURE - OPERATION G.H.O.S.T.

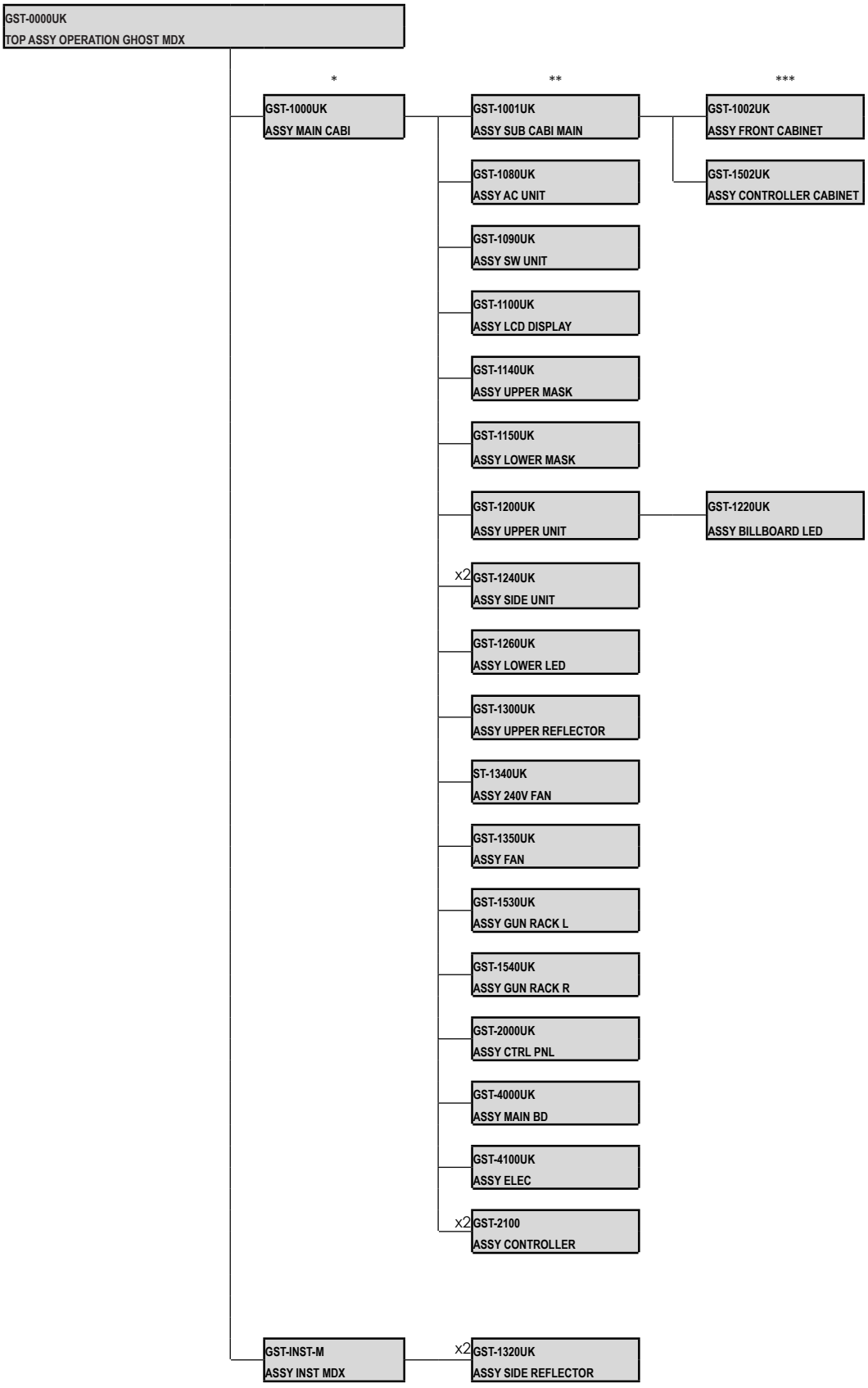

You can get this game at www.magic-play.eu

You can get this game at www.magic-play.eu

① ASSY TOP OPERATION G.H.O.S.T. (GST-0002UK) (D-1/1)

ITEM NO	PART NUMBER	DESCRIPTION	QTY
*1	GST-1000UK	ASSY MAIN CABI	1
*6	421-7988-91UK	STICKER SERIAL NUMBER UK	2
*12	421-7020UK	STICKER CAUTION FORK	4
*17	LB1102	STICKER DANGEROUS VOLTAGE	3
*18	LB1046	LABEL TESTED FOR ELEC. SAFETY	1
*20	LB1130	LABEL WEEE WHEELIE BIN	1
*401	GST-INST-M	ASSY INST MDX	1
*410		PALLETS?	1
*411		SHRINK WRAP??	1

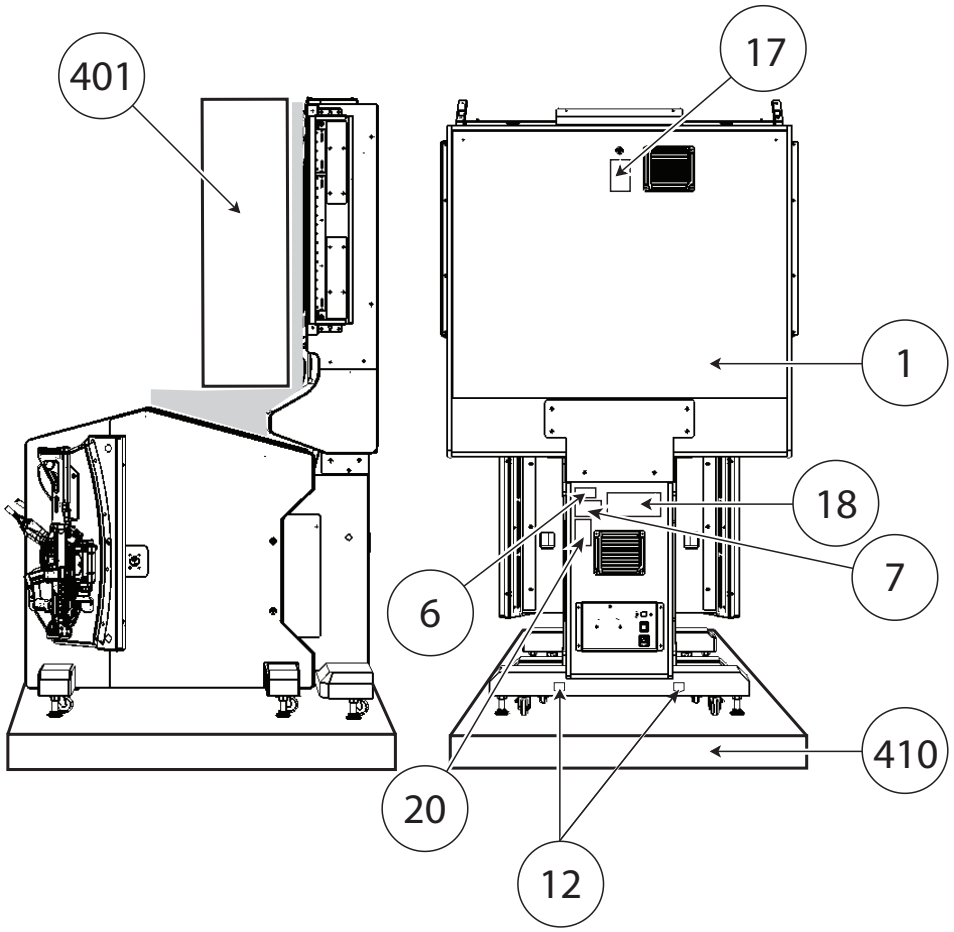

**Please refer to pages "Handling Precautions" for detail on safety labels*

You can get this game at www.magic-play.eu

You can get this game at www.magic-play.eu

② ASSY MAIN CABI (GST-1000UK) (D-1/3)

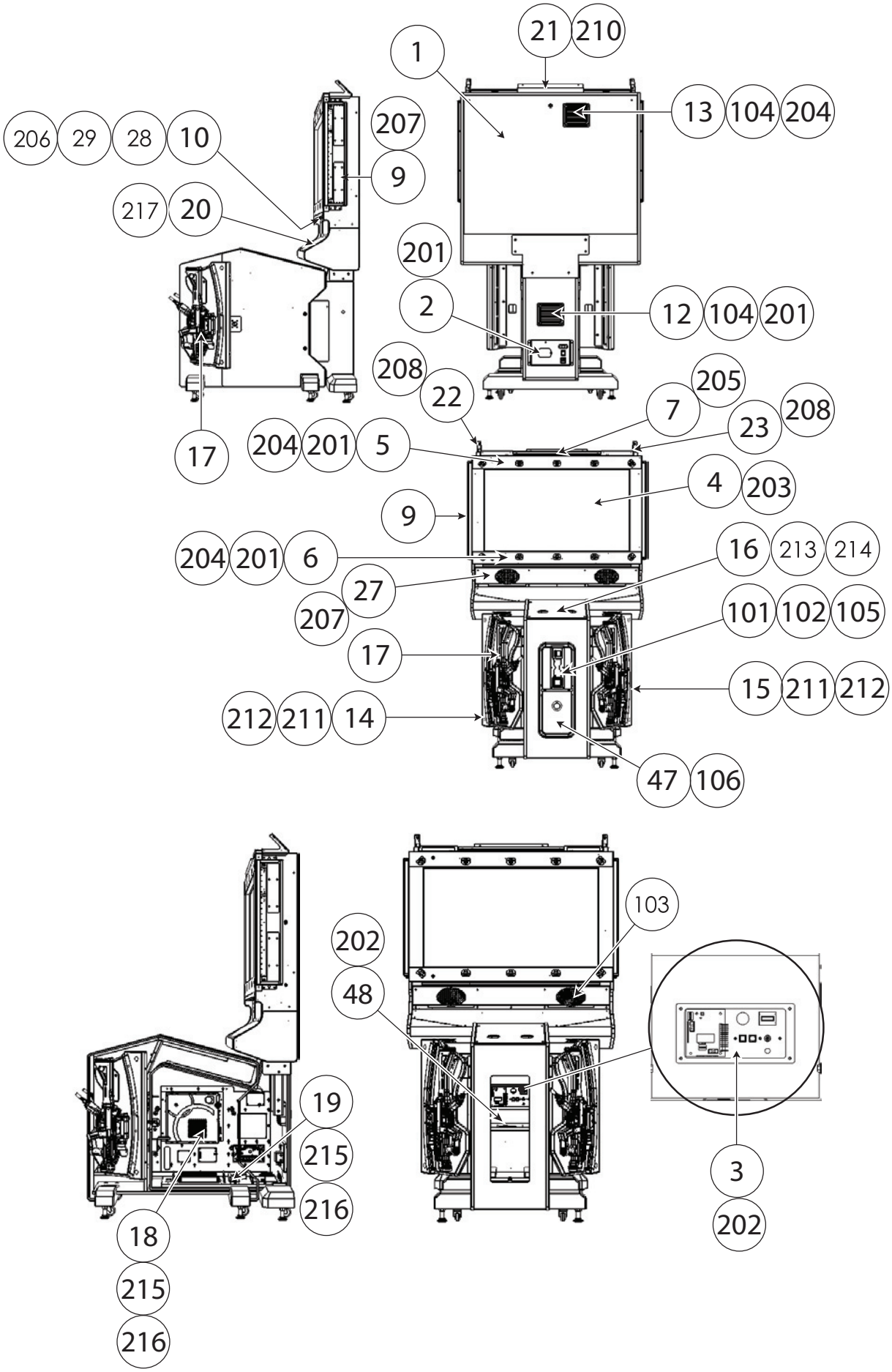

You can get this game at www.magic-play.eu

You can get this game at www.magic-play.eu

② ASSY MAIN CABI (GST-1000UK) (D-2/3)

ITEM NO	PART NUMBER	DESCRIPTION	QTY
**1	GST-1001UK	ASSY SUB CABI MAIN	1
**2	GST-1080UK	ASSY AC UNIT	1
**3	GST-1090UK	ASSY SW UNIT	1
**4	GST-1100UK	ASSY LCD DISPLAY	1
**5	GST-1140UK	ASSY UPPER MASK	1
**6	GST-1150UK	ASSY LOWER MASK	1
**7	GST-1200UK	ASSY UPPER UNIT	1
**9	GST-1240UK	ASSY SIDE UNIT	2
**10	GST-1260UK	ASSY LOWER LED	1
**11	GST-1300UK	ASSY UPPER REFLECTOR	1
**12	ST-1340UK	ASSY 240V FAN	1
**13	GST-1350UK	ASSY FAN	1
**14	GST-1530UK	ASSY GUN RACK L	1
**15	GST-1540UK	ASSY GUN RACK R	1
**16	GST-2000UK	ASSY CTRL PNL	1
**17	GST-2100	ASSY CONTROLLER	2
**18	GST-4000UK	ASSY MAIN BD	1
**19	GST-4100UK	ASSY ELEC	1
**20	GST-1015UK	PLATE LOWER REFLECTION	1
**21	GST-1016UK	BRKT UPPER BOARD	1
**22	GST-1017UK	BRKT BOARD SUPPORT LH	1
**23	GST-1018UK	BRKT BOARD SUPPORT RH	1
**24	GST-1023UK	BILLBOARD PLATE	1
**27	GST-1281UK	PLATE LOWER LED	1
**28	GST-1282UK	SASH LOWER LED COVER	1
**29	GST-1283UK	COVER LOWER LED	1
**47	PP1087	BOX CASH FOR MINI DOOR	1
**48	DUT-0302UK	COIN PATH PLATE	1
**50	GST-1050UK	STICKER LOWER SIDE L	1
**51	GST-1051UK	STICKER LOWER SIDE R	1
**52	GST-1052UK	STICKER LOWER REFLECTOR SIDE L	1
**53	GST-1053UK	STICKER LOWER REFLECTOR SIDE R	1
**54	GST-1054UK	STICKER LOWER REFLECTOR BTM	1
**55	GST-1055UK	STICKER UPPER SIDE L	1
**56	GST-1056UK	STICKER UPPER SIDE R	1
**57	GST-1057UK	STICKER SIDE REFLECTOR BACK L	1
**58	GST-1058UK	STICKER SIDE REFLECTOR BACK R	1
**59	GST-1059UK	STICKER COIN TOWER	1
**101	220-5374-01	DOOR DFMD W/FR&LOCK C120 UNIV	1
**102	220-5574UK	LOCK (J9117) KEY TO LIKE 22MM W CAM	1
**103	130-04030-E	SPKR ELIP 4ohm 30W VIS DX4x6P	1
**104	253-5460-01	AIR VENT BLACK	2
**105	220-5610-01	SR3 STD BODYBSR3INGB	1
**106	220-5727-01B	DOOR CASH H.S. STS	1
**107	FN1012	FAN GUARD METAL 120MM (FG-12)	2
**108	837-15093-01	IC BD LED DRVR CONT RS232	2
**201	000-T00420-OB	M4X20 MSCR TH BLK	16
**202	000-P00420-W	M4X20 MSCR PAN W/FS PAS	8
**203	000-P00416-W	M4X16 MSCR PAN W/FS PAS	14

You can get this game at www.magic-play.eu

You can get this game at www.magic-play.eu

② ASSY MAIN CABI (GST-1000UK) (D-3/3)

**204	000-P00410-W	M4X10 MSCR PAN W/FS PAS	17
**205	000-T00430-OB	M4X30 MSCR TH BLK	4
**206	050-F00400	M4 NUT FLG SER PAS	4
**207	000-T00416-OB	M4X16 MSCR TH BLK	16
**208	030-000625-SB	M6X25 BLT W/S BLK	8
**209	068-652016-OB	M6 WSHR 20OD FLT BLK	4
**210	030-000616-OB	M6X16 BLT W/S BLK	2
**211	030-000850-S	M8X50 BLT W/S PAS	10
**212	068-852216	M8 WSHR 22OD FLT PAS	10
**213	FAS-200013	M4X16 SKT CAP CRM	6
**214	280-6686-01UK	4.5X16X4 SP WSHR	6
**215	000-P00425-W	M4X25 MSCR PAN W/FS PAS	3
**216	068-441616	M4 WSHR 16OD FLT PAS	3
**217	000-T00412-OC	M4X12 MSCR TH CRM	7
**218	060-F00600-OB	M6 WSHR FORM A FLT BLK	6
**219	012-P00325	N4X1" S/TAP PAN PAS	8
**301	GST-60005UK	WH AC LCD & FAN	1
**302	GST-60017UK	WH GUN EXTN	1
**303	GST-60018UK	WH HOLSTER & BTN	1
**304	GST-60020UK	WH COIN HANDLING EXTN	1
**305	GST-60022UK	WH HOLSTER C	1
**306	GST-60026UK	WH SPKR MAIN SPLIT	1
**307	GST-60031UK	WH LED SIG & PWR	1
**308	GST-60034UK	WH LED DRV LINK	2
**309	BE-60020UK	WH LED ZIF	2
**310	SRS-60020UK	WH SPKR	2
**311	600-7009-1800UK	ASSY RGB CA D-SUB 15	1
**312	LM1006LOR	LOOM COIN MECH LAMP	1

You can get this game at www.magic-play.eu

You can get this game at www.magic-play.eu

③ ASSY SUB CABI MAIN (GST-1001UK) (D-1/1)

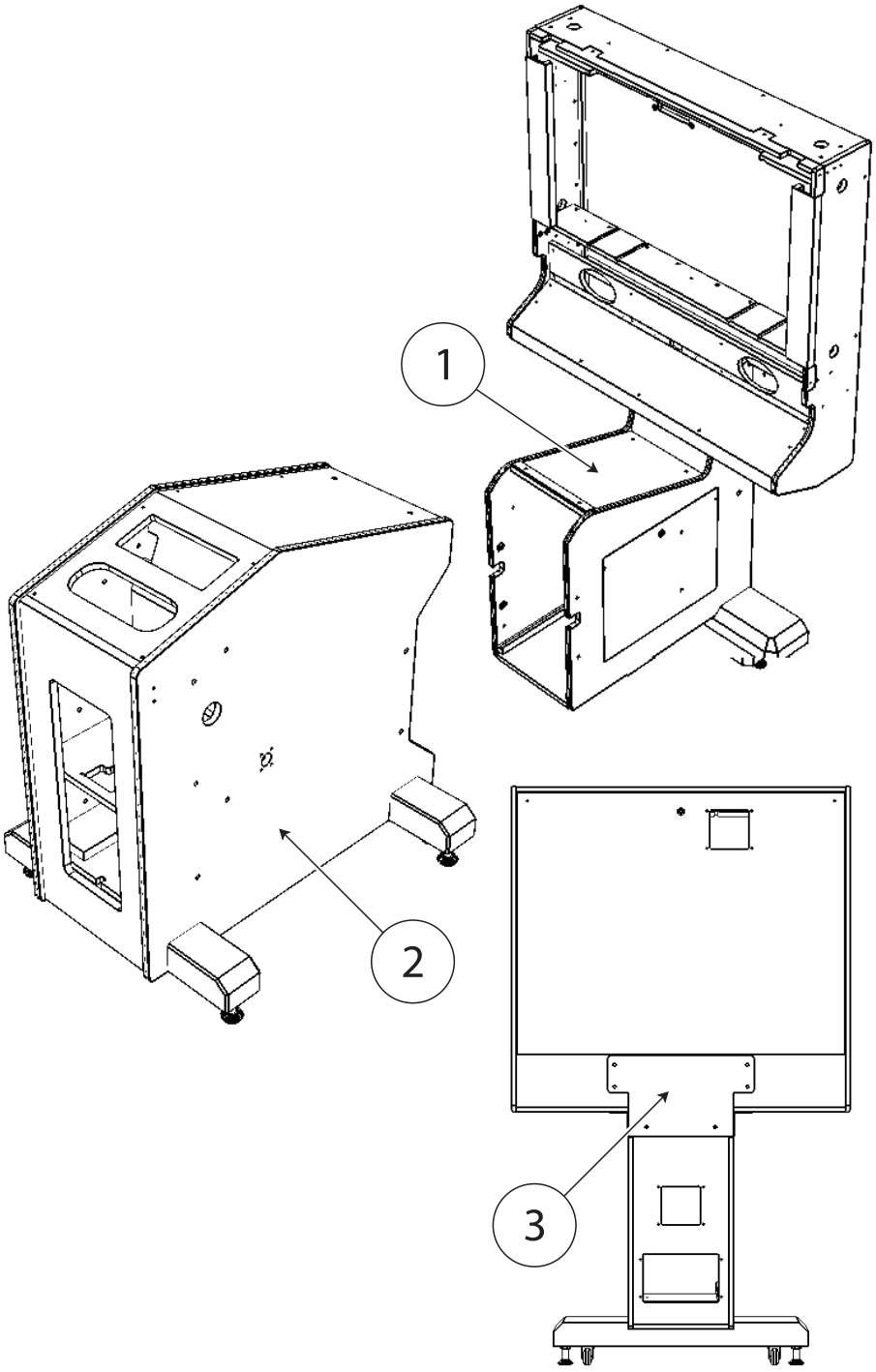

ITEM	PART NUMBER	DESCRIPTION	QTY
***1	GST-1002UK	ASSY FRONT CABINET	1
***2	GST-1502UK	ASSY CONTROLLER CABINET	1
***3	GST-1042UK	BRKT CABI SUPPORT	1

You can get this game at www.magic-play.eu

You can get this game at www.magic-play.eu

④ ASSY FRONT CABI (GST-1002UK) (D-1/1)

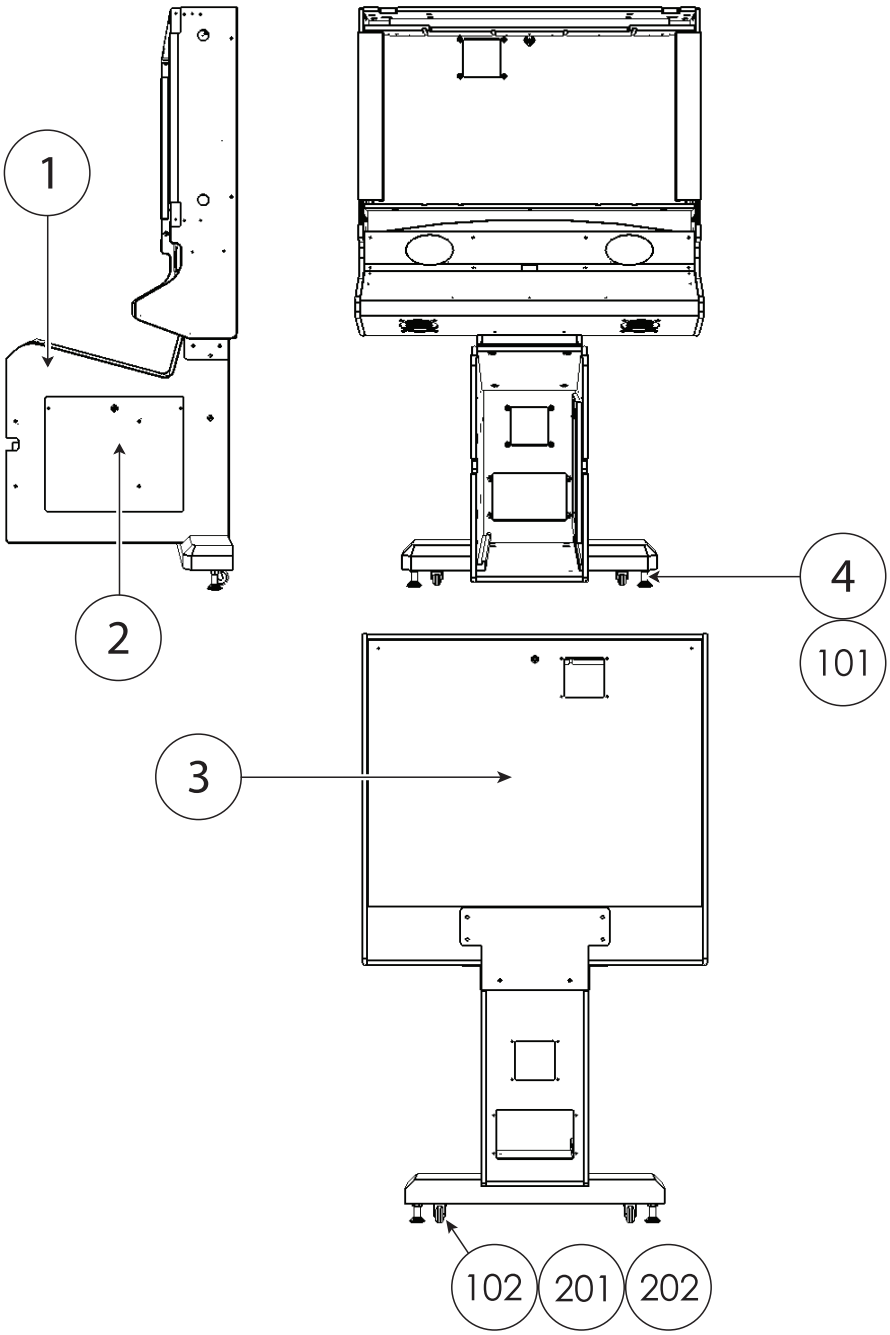

ITEM NO	PART NUMBER	DESCRIPTION	QTY
****1	GST-1002-AUK	CABI BLANK	1
****2	GST-1002-BUK	DOOR GAMEBOARD	1
****3	GST-1002-CUK	DOOR BACK	1
****4	ADH-F0038UK	ADJUSTER PLATE	2
****101	601-5699UK-01	LEG ADJUSTER M16X100 1L/NUT	2
****104	117-0062	PLATE LOCK RETAINER SPIKE WASH	1
****201	030-000625-S	M6X25 BLT W/S PAS	12
****202	050-F00600	M6 WSHR FORM A FLT PAS	12

You can get this game at www.magic-play.eu

You can get this game at www.magic-play.eu

⑤ ASSY CONTROLLER CABI (GST-1502UK) (D-1/1)

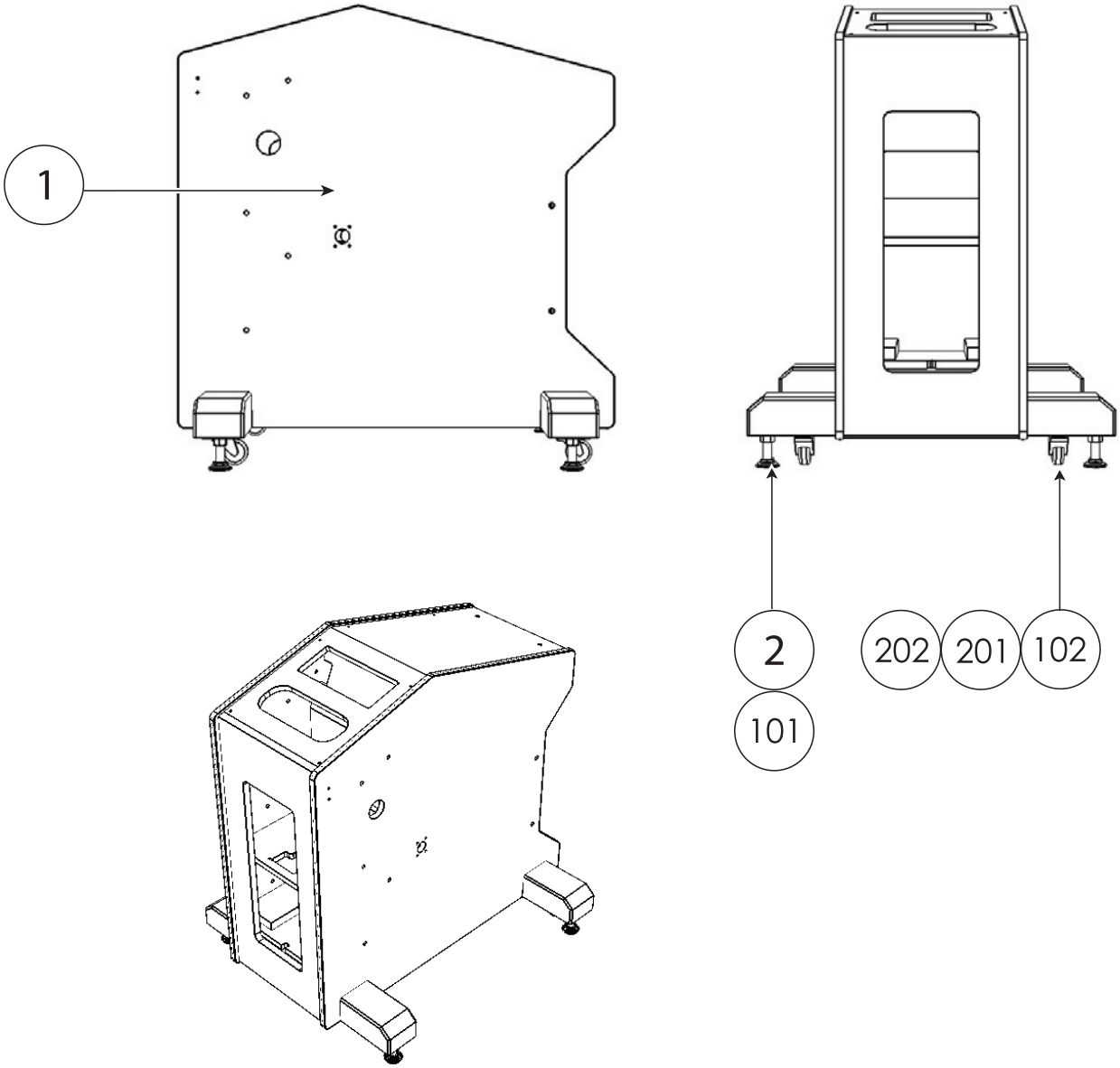

ITEM NO	PART NUMBER	DESCRIPTION	QTY
****1	GST-1502-AUK	CABI BLANK	1
****2	ADH-F0038UK	ADJUSTER PLATE	4
****101	601-5699UK-01	LEG ADJUSTER M16X100 1L/NUT	4
****201	030-000625-S	M6X25 BLT W/S PAS	24
****202	050-F00600	M6 WSHR FORM A FLT PAS	24
***3	GST-1042UK	BRKT CABI SUPPORT	1
***201	030-000625-SB	M6X25 BLT W/S BLK	14
***202	068-652016-OB	M6 WSHR 20OD FLT BLK	14

You can get this game at www.magic-play.eu

You can get this game at www.magic-play.eu

⑥ ASSY AC UNIT (GST-108UK) (D-1/1)

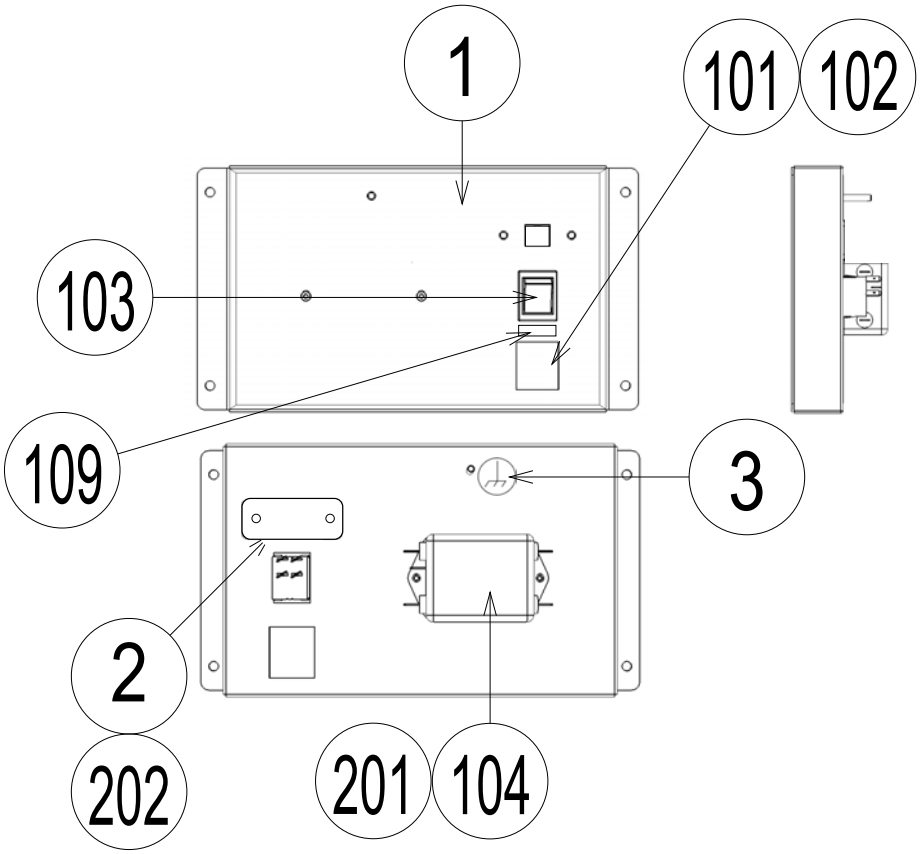

ITEM NO	PART NUMBER	DESCRIPTION	QTY
***1	RD-1541UK	AC BRKT	1
***2	ST-0403UK	PLATE AC CAP	1
***3	LB1096	STICKER PROTECTIVE EARTH	1
***101	EP1302	EUROSOCKET FUSED 10A 250VAC	1
***102	514-5078-5000	FUSE 5X20 CERAMIC SB 5000mA	2
***103	SW1109	SWITCH ROCKER 250V AC	1
***104	EP1419	FILTER SCHAFFNER 2030-16-06	1
***107	EP1391	COUPLER INLINE LAN RJ45	1
***108	310-5029-D508	HEAT SHRINK SLEEVING 50.8DIA	4
***109	LB1126-5-250	FUSE LABEL 5A 250V	1
***201	000-P00308-W	M3X8 MSCR PAN W/FS PAS	2
***202	050-F00400	M4 NUT FLG SER PAS	4
***301	GST-60001UK	WH AC IN	1

You can get this game at www.magic-play.eu

You can get this game at www.magic-play.eu

⑦ ASSY SWITCH UNIT (GST-1090UK) (D-1/1)

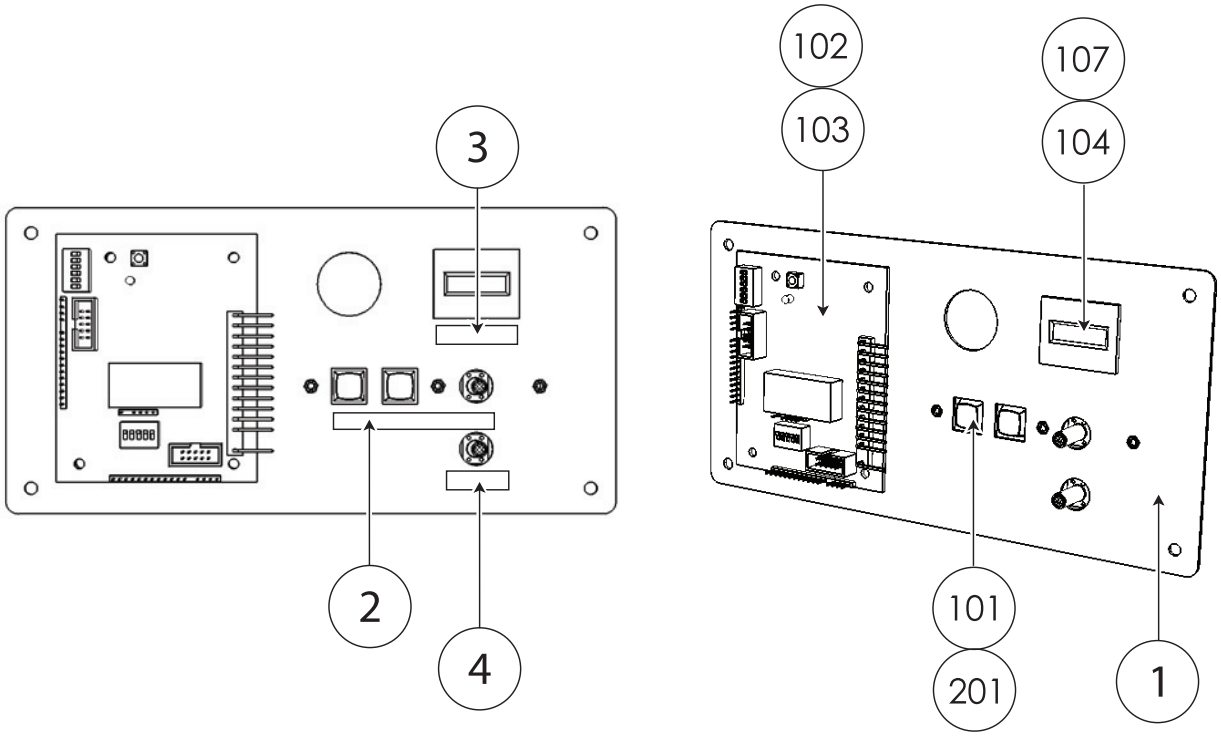

ITEM NO	PART NUMBER	DESCRIPTION	QTY
***1	GST-1091UK	PLATE SW VOL BD	1
***2	LB1152	STICKER VTS	1
***3	LB1155	STICKER COINS IN	1
***4	LB1168	STICKER VOLUME	1
***101	838-14548-01UK	SW & VOL CTL BD	1
***102	280-L00706-PM	STANDOFF 6.4MM HOLE PM	4
***103	EP1380-01	CREDIT BOARD EXCEL	1
***104	220-5643UK	COIN METER SMALL 12V	1
***107	OS1098	CRIMP BELL END SMALL	2
***201	000-P00308-W	M3X8 MSCR PAN W/FS PAS	3
***301	GST-60024UK	WH COIN HANDLING	1

You can get this game at www.magic-play.eu

You can get this game at www.magic-play.eu

⑧ ASSY LCD DISPLAY (GST-1100K) (D-1/1)

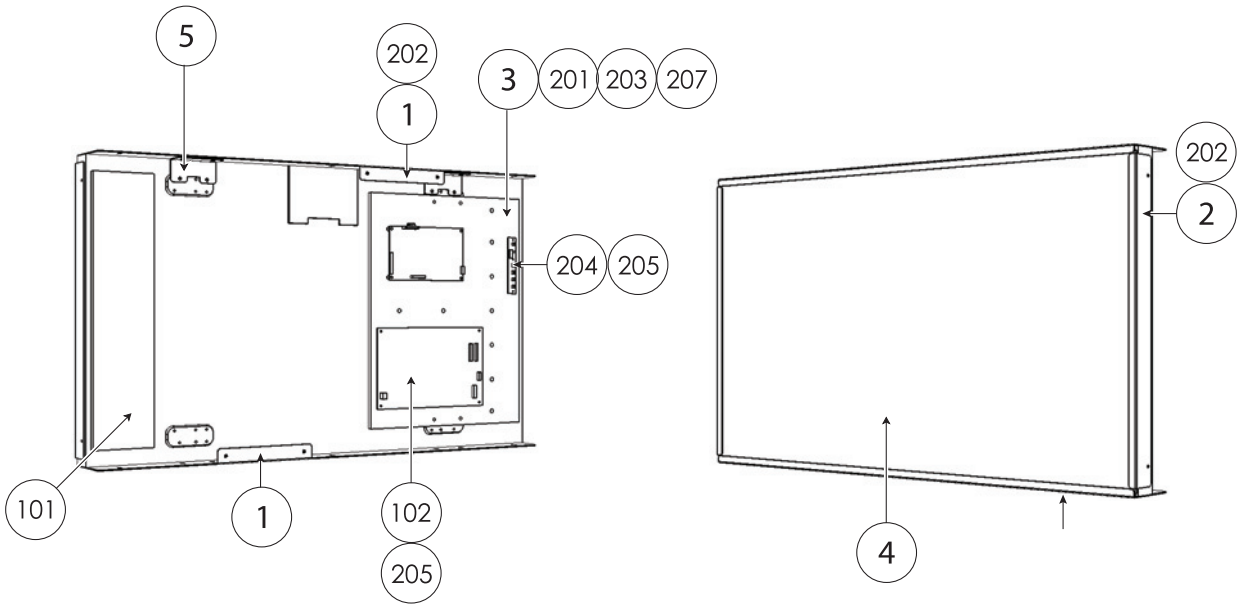

ITEM NO	PART NUMBER	DESCRIPTION	QTY
***1	GST-1101UK	PLATE LCD MOUNT	2
***2	GST-1102UK	RETAINER LCD GLASS SIDE	2
***3	GST-1110UK	PANEL PRISMA BD MOUNT	1
***4	GST-1121UK	GLASS LCD SCREEN PROTECT	1
***101	200-6042-AUO	DISPLAY 42" LCD AUO P420HW01	1
***102	400-242-024-01	PSU 42" LCD PVP-2420	1
***201	000-P00416-W	M4X16 MSCR PAN W/FS PAS	4
***202	000-P00410-W	M4X10 MSCR PAN W/FS PAS	12
***203	068-441616	M4 WSHR 16OD FLT PAS	4
***204	012-P00320	N4X3/4" S/TAP PAN PAS	3
***205	280-L00709-OS	STANDOFF 7OD 4ID 9L	7
***206	280-L00640-WX	STANDOFF 6MM WOOD XL	4
***207	280-A01264-WX	ROUTER TWIST D12 BHKL-450-4-01	12

You can get this game at www.magic-play.eu

You can get this game at www.magic-play.eu

⑨ ASSY UPPER MASK (GST-1140UK) (D-1/1)

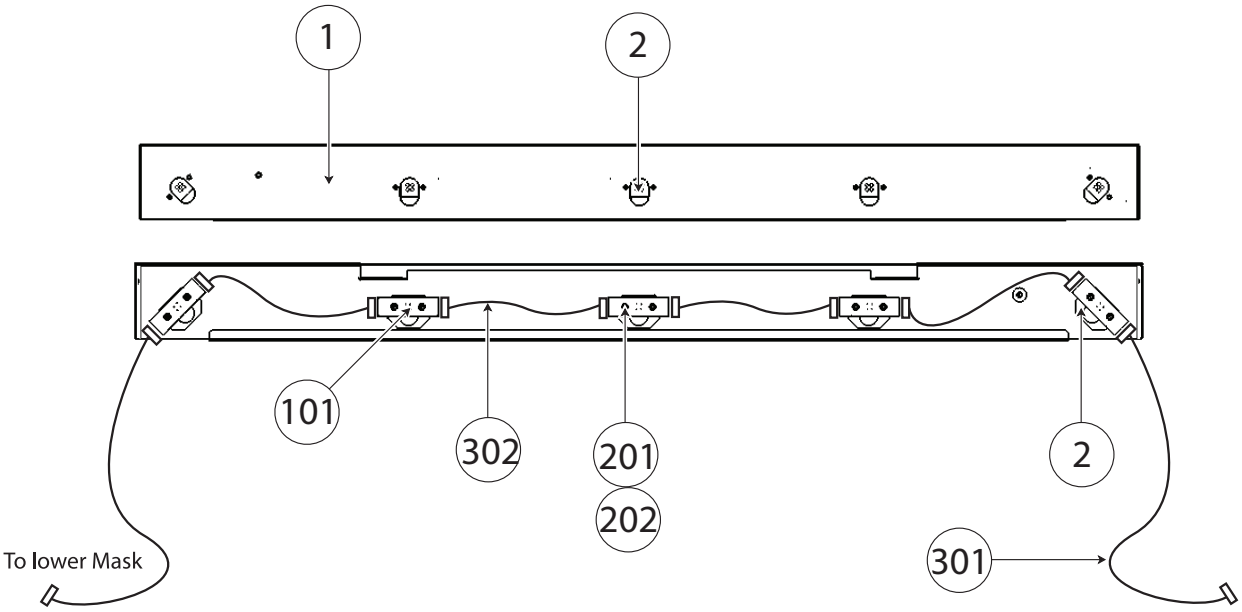

ITEM NO	PART NUMBER	DESCRIPTION	QTY
***1	GST-1141UK	MASK UPPER	1
***2	JPT-1082X	IR COVER	5
***101	838-15119	LED BD HFN G.SENSE GLG	5
***201	050-U00300	M3 NUT NYLOK PAS	10
***202	068-330808-PN	M3 WSHR 8OD FLT NYLON	10
***301	GST-60029UK	WH MASK LONG	2
***302	GST-60030UK	WH MASK SHORT	4
***303	600-9090-44K	WH EARTH 900MM M4/M4	1

You can get this game at www.magic-play.eu

You can get this game at www.magic-play.eu

⑩ ASSY LOWER MASK (GST-1150UK) (D-1/1)

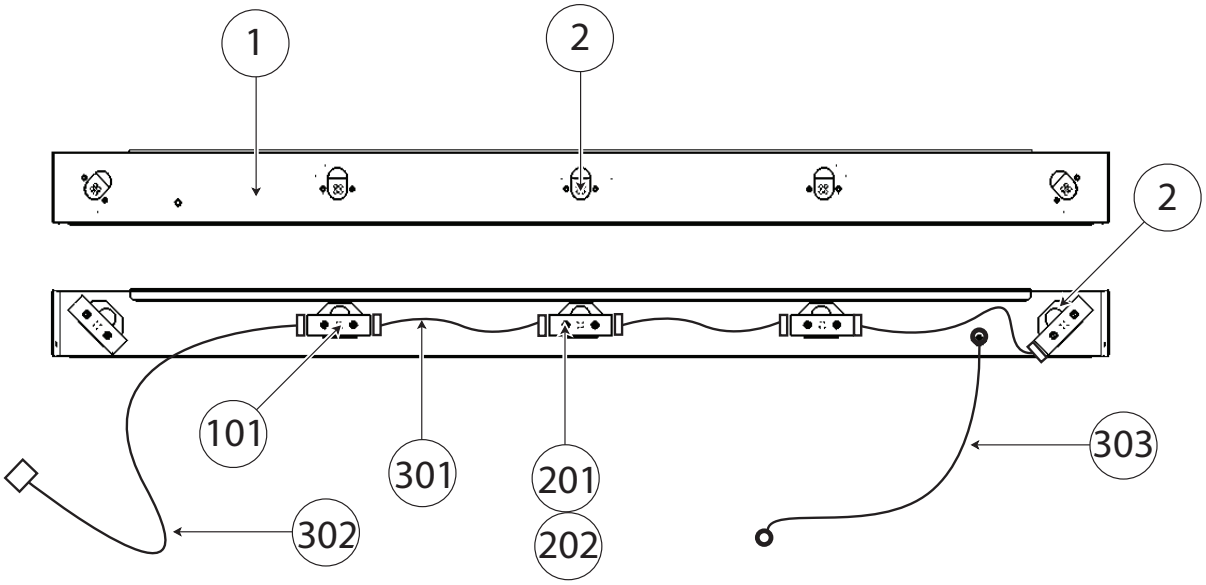

ITEM NO	PART NUMBER	DESCRIPTION	QTY
***1	GST-1143UK	MASK LOWER	1
***2	JPT-1082X	IR COVER	5
***101	838-15119	LED BD HFN G.SENSE GLG	5
***201	050-U00300	M3 NUT NYLOK PAS	10
***202	068-330808-PN	M3 WSHR 8OD FLT NYLON	10
***301	GST-60030UK	WH MASK SHORT	3
***302	GST-60027UK	WH G SENSE TO MASK B	1

You can get this game at www.magic-play.eu

You can get this game at www.magic-play.eu

⑪ ASSY UPPER UNIT (GST-1200UK) (D-1/1)

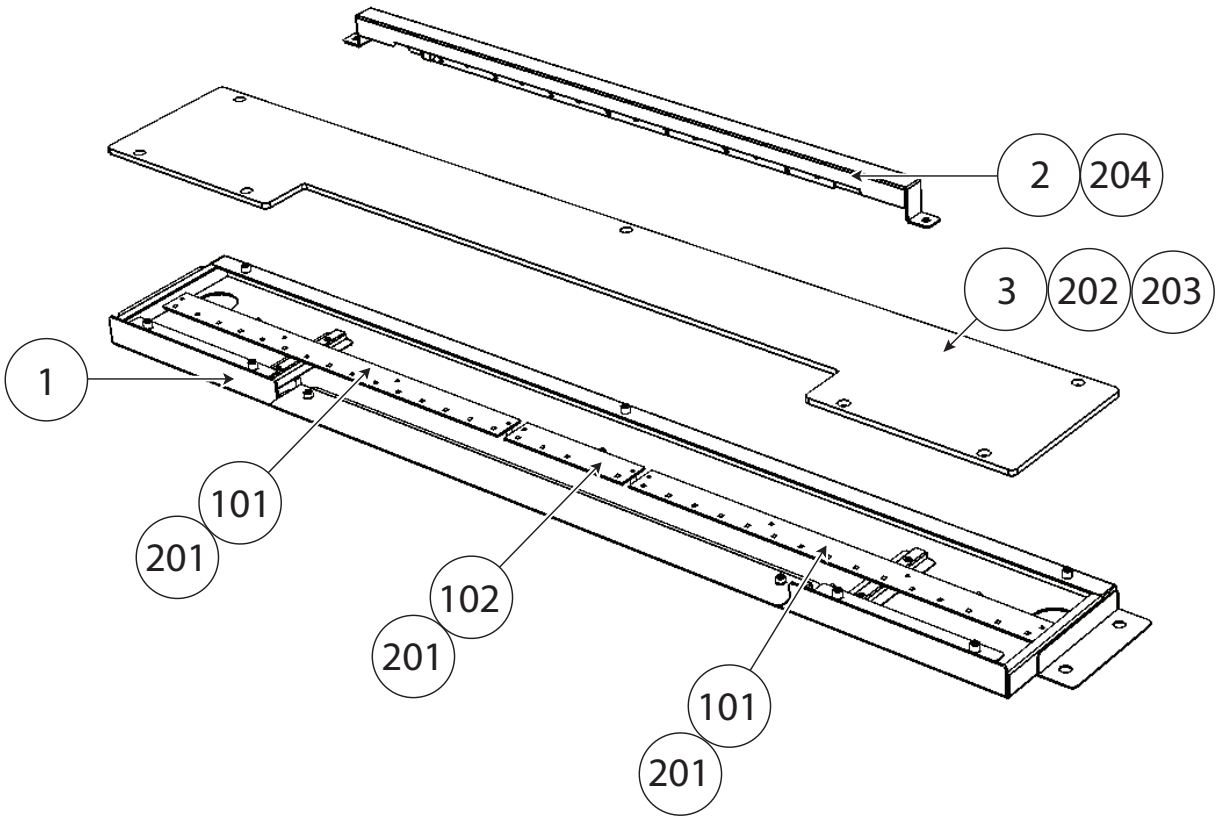

ITEM NO	PART NUMBER	DESCRIPTION	QTY
***1	GST-1201UK	BASE UPPER UNIT	1
***2	GST-1220UK	ASSY BILLBOARD LED	1
***3	GST-1014UK	COVER UPPER UNIT	1
***101	837-15141	LED BD RGB X15 SPI GST S	2
***102	837-15142	LED BD RGB X5 SPI GST S	1
***201	000-P00310-W	M3X10 MSCR PAN W/FS PAS	10
***202	000-T00410-OB	M4X10 MSCR TH BLK	12
***203	060-F00400	M4 WSHR FORM A FLT PAS	2
***204	050-F00400	M4 NUT FLG SER PAS	2
***205	FAS-200013	M4X16 SKT CAP CRM	7
***206	280-6686-01UK	4.5X16X4 SP WSHR	7
***301	GST-60035UK	WH CNTRL TO LED LWR	1
***302	GST-60036UK	WH LED FEATURE A	2
***303	GST-60037UK	WH LED FEATURE B	1

You can get this game at www.magic-play.eu

You can get this game at www.magic-play.eu

⑫ ASSY BILLBOARD LED (GST-1220UK) (D-1/1)

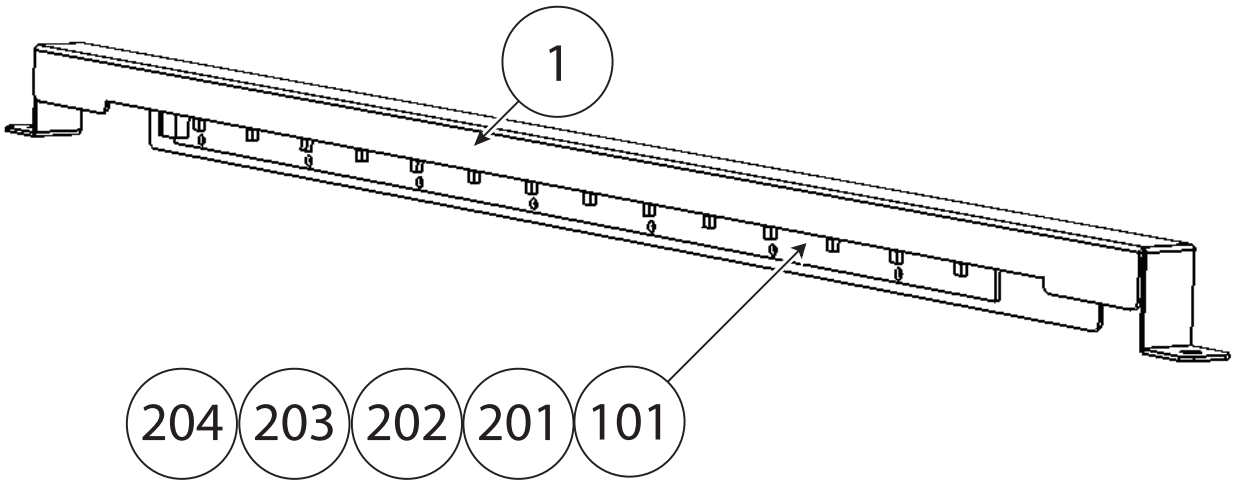

ITEM NO	PART NUMBER	DESCRIPTION	QTY
***1	GST-1221UK	BRKT BILLBOARD LED	1
***101	838-14972-07	LED BD WHITE 3X7 BLOCK	1
***201	000-P00318-W	M3X18 MSCR PAN W/FS PAS	5
***202	280-L00605-OS	STANDOFF 6.35OD 3.56ID 4.76L	5
***203	050-U00300	M3 NUT NYLOK PAS	5
***204	068-330808-PN	M3 WSHR 8OD FLT NYLON	5
***301	GST-60040UK	WH BILLBOARD LED	1

You can get this game at www.magic-play.eu

You can get this game at www.magic-play.eu

⑬ ASSY SIDE UNIT (GST-1240UK) (D-1/1)

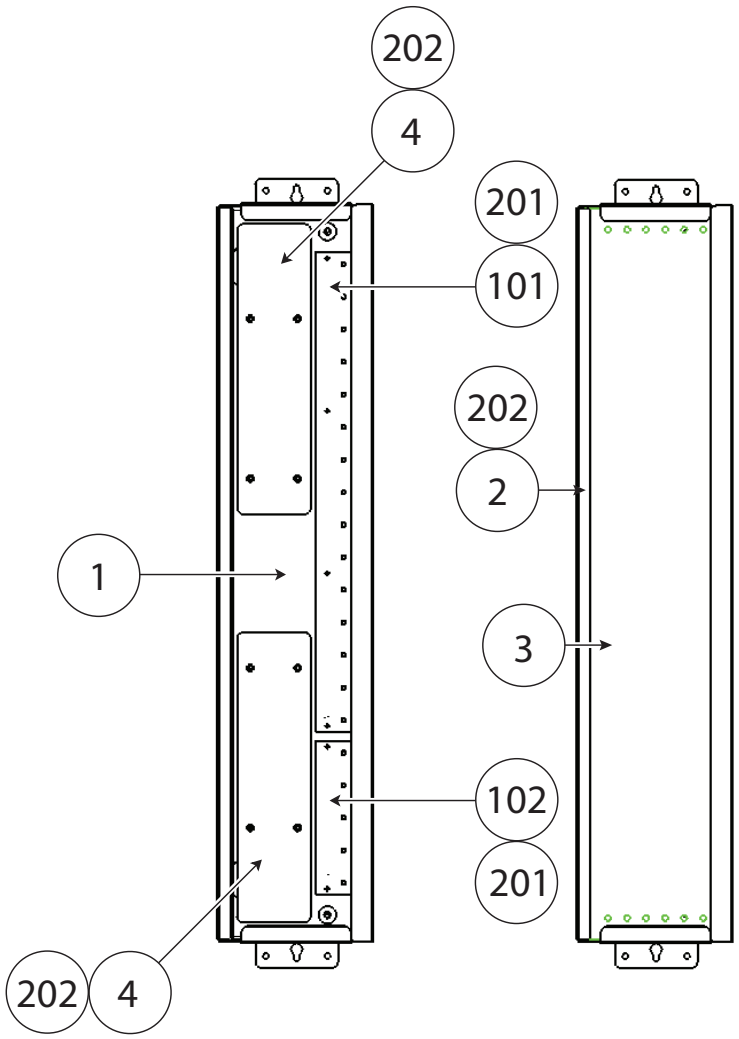

ITEM NO	PART NUMBER	DESCRIPTION	QTY
***1	GST-1241UK	BASE SIDE UNIT	1
***2	GST-1242UK	SASH SIDE UNIT	1
***3	GST-1243UK	COVER SIDE UNIT	1
***4	GST-1244UK	COVER SIDE UNIT INSIDE	2
***101	837-15141	LED BD RGB X15 SPI GST S	1
***102	837-15142	LED BD RGB X5 SPI GST S	1
***201	000-P00310-W	M3X10 MSCR PAN W/FS PAS	6
***202	000-T00410-OB	M4X10 MSCR TH BLK	12
***301	GST-60036UK	WH LED FEATURE A	1
***302	GST-60038UK	WH LED FEATURE C	1

You can get this game at www.magic-play.eu

You can get this game at www.magic-play.eu

⑭ ASSY LOWER LED (GST-1260UK) (D-1/1)

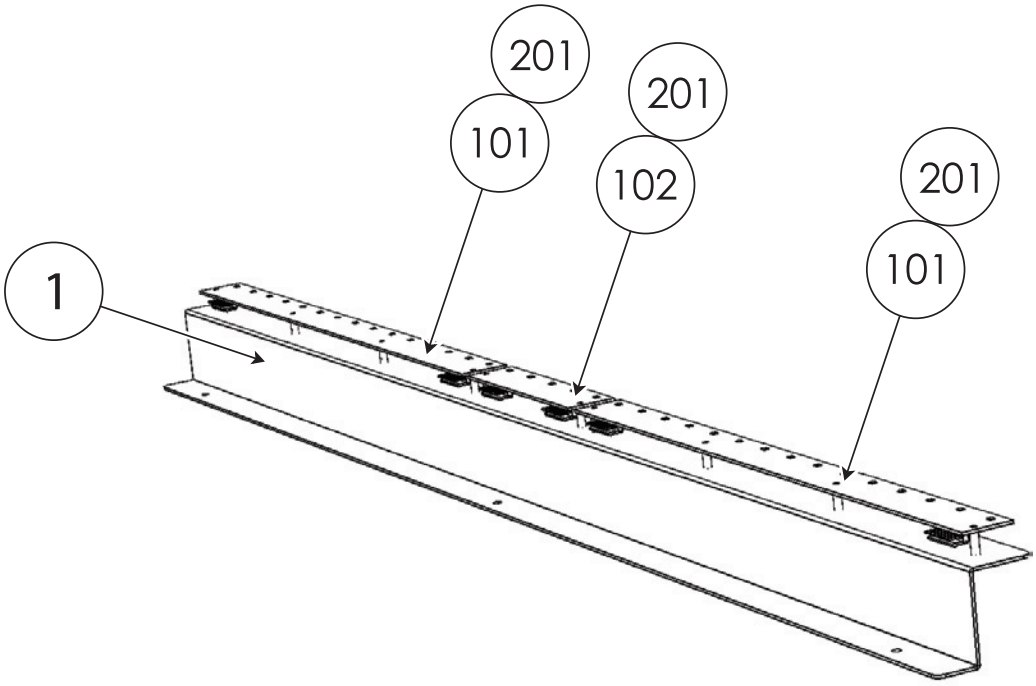

ITEM NO	PART NUMBER	DESCRIPTION	QTY
***1	GST-1261UK	BRKT LOWER LED	1
***101	837-15141	LED BD RGB X15 SPI GST S	2
***102	837-15142	LED BD RGB X5 SPI GST S	1
***201	000-P00310-W	M3X10 MSCR PAN W/FS PAS	10
***301	GST-60035UK	WH CNTRL TO LED LWR	1
***302	GST-60036UK	WH LED FEATURE A	2
***303	GST-60037UK	WH LED FEATURE B	1

You can get this game at www.magic-play.eu

You can get this game at www.magic-play.eu

⑮ ASSY UPPER REFLECTOR (GST-1300UK) (D-1/1)

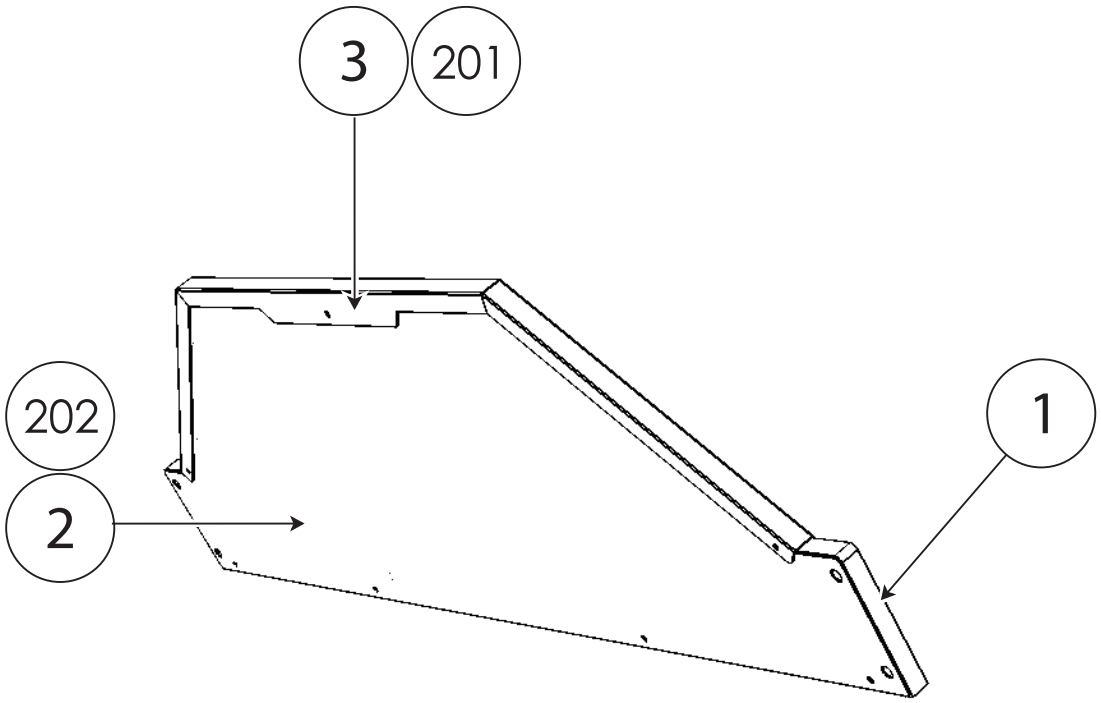

ITEM NO	PART NUMBER	DESCRIPTION	QTY
***1	GST-1301UK	BOARD UPPER	1
***2	GST-1303UK	PLATE UPPER REFLECTOR	1
***3	GST-1304UK	SASH UPPER BOARD	1
***201	000-T00410-OB	M4X10 MSCR TH BLK	7
***202	000-T00412-OC	M4X12 MSCR TH CRM	4

You can get this game at www.magic-play.eu

You can get this game at www.magic-play.eu

⑯ ASSY SIDE REFLECTOR (GST-1320UK) (D-1/1)

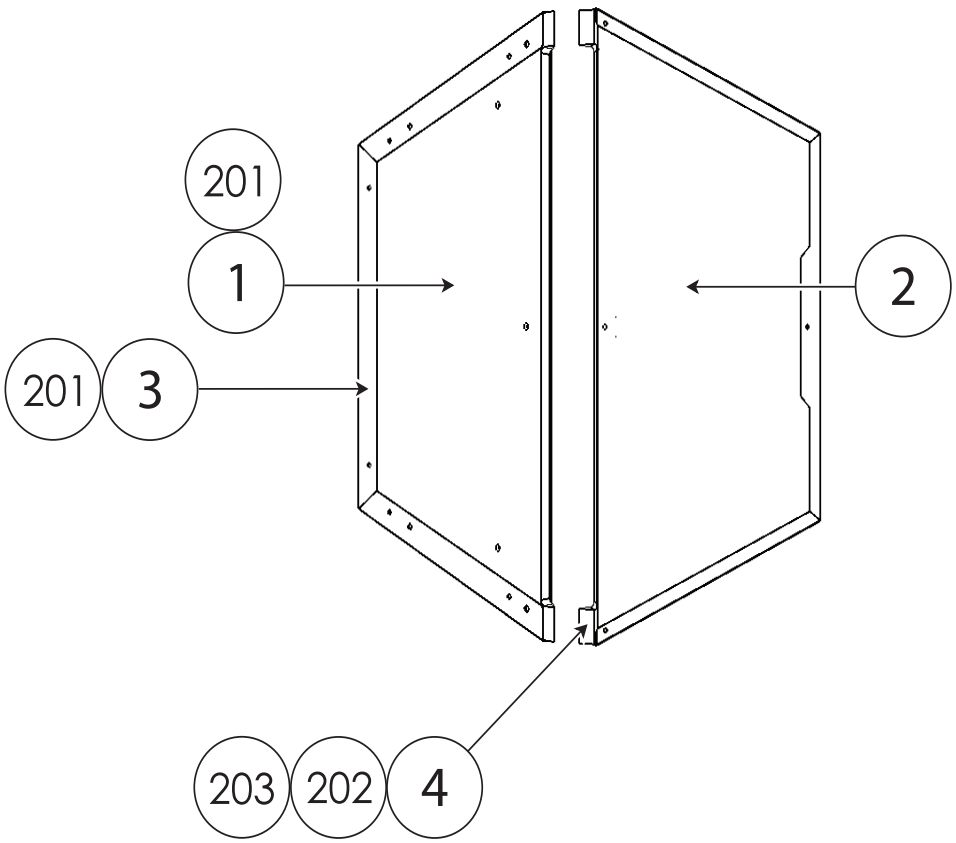

ITEM NO	PART NUMBER	DESCRIPTION	QTY
***1	GST-1321UK	BOARD SIDE	1
***2	GST-1323UK	PLATE SIDE REFLECTOR	1
***3	GST-1324UK	SASH SIDE BOARD	1
***4	GST-1041UK	BRKT SIDE BOARD	1
***201	000-T00410-OB	M4X10 MSCR TH BLK	10
***202	030-000616-SB	M6X16 BLT W/S BLK	3
***203	068-652016-OB	M6 WSHR 20OD FLT BLK	3

You can get this game at www.magic-play.eu

You can get this game at www.magic-play.eu

⑰ ASSY FAN 12VDC (GST-1340UK) (D-1/1)

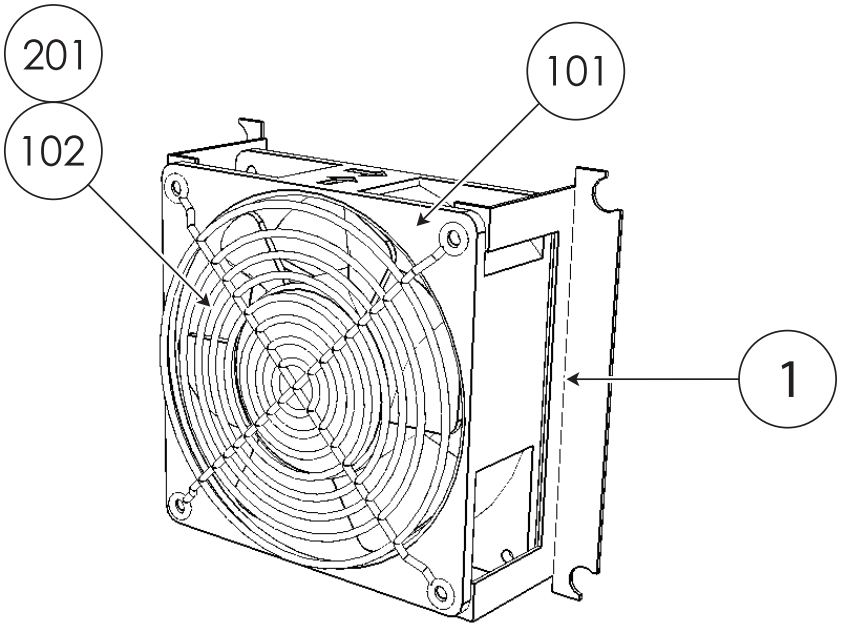

ITEM NO	PART NUMBER	DESCRIPTION	QTY
***1	105-5340-01	FAN BRKT LONG	2
***101	260-0024-01UK	FAN AC AXIAL DO200A	1
***102	FN1012	FAN GUARD METAL 120MM (FG 12)	1
***201	000-P00312-W	M3X12 MSCR PAN W/FS PAS	4
***301	ST-60026UK	WH 240V FAN	1

You can get this game at www.magic-play.eu

You can get this game at www.magic-play.eu

⑱ ASSY FAN GST 12VDC (GST-1350UK) (D-1/1)

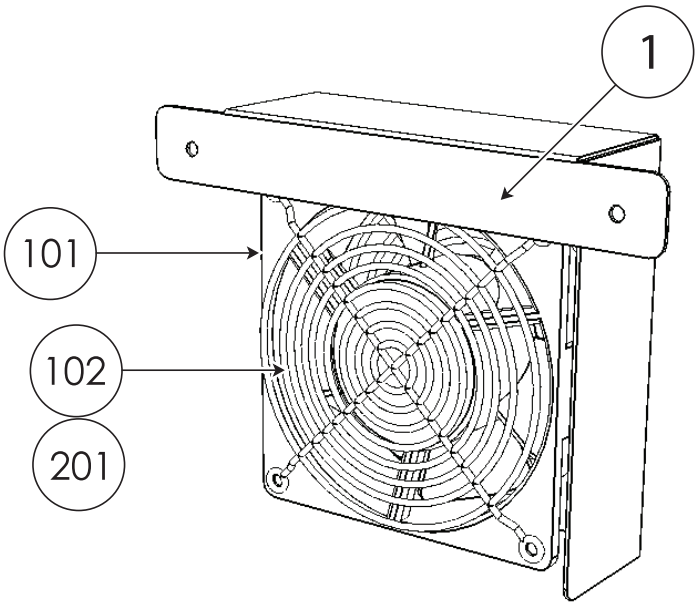

ITEM NO	PART NUMBER	DESCRIPTION	QTY
***1	GST-1008UK	BRKT FAN	1
***101	260-0024-01UK	FAN AC AXIAL DO200A	1
***102	FN1012	FAN GUARD METAL 120MM (FG 12)	2
***201	000-P00312-W	M3X12 MSCR PAN W/FS PAS	4
***301	ST-60026UK	WH 240V FAN	1

You can get this game at www.magic-play.eu

You can get this game at www.magic-play.eu

⑲ ASSY GUN RACK L (GST-1530UK) (D-1/1)

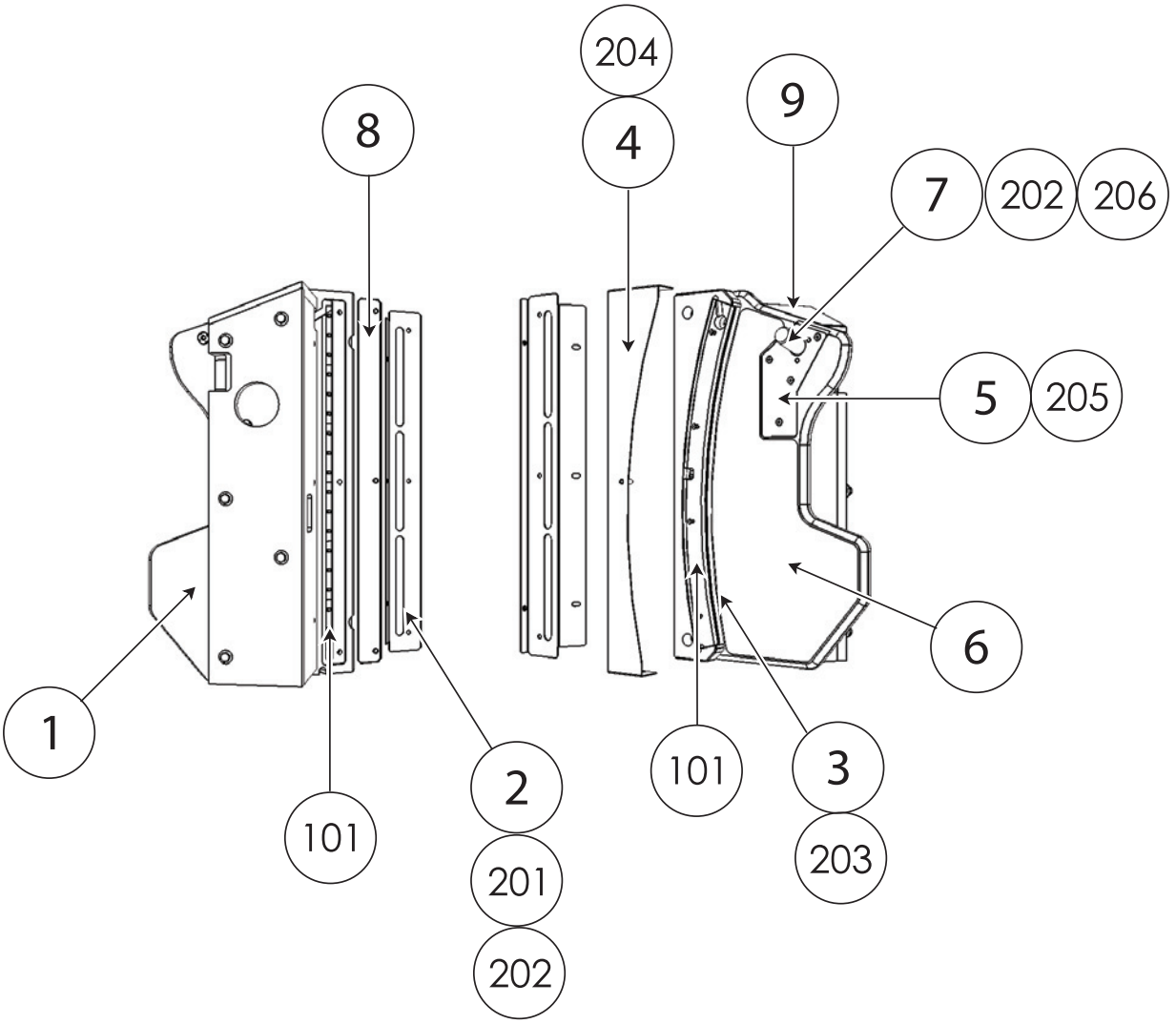

ITEM NO	PART NUMBER	DESCRIPTION	QTY
**1	GST-1531UK	RACK MTG GUN L	1
**2	GST-1532UK	BRKT SUPPORT REAR	1
**3	GST-1533UK	BEZEL LED ARC	1
**4	GST-1534UK	COVER LED BEZEL L	1
**5	GST-1537UK	PLATE HOLDER GUN BUTT L	1
**6	GST-1536UK	DECAL GUN RACK L	1
**7	GST-1538UK	HOOK GUN BUTT	1
**8	GST-1539UK	COVER REVERSE LIGHT	1
**9	GST-1551UK	DECAL TOP GUN RACK L	1
**101	SSR-60022-060UK	WH LED ASSY 600	2
**201	029-B00630-0B	M6X30 SKT BH BLK	5
**202	068-652016-0B	M6 WSHR 20OD FLT BLK	6
**203	000-F00420	M4X20 MSCR CSK PAS	4
**204	000-T00408-0B	M4X8 MSCR TH BLK	4
**205	020-000620-0Z	M6X20 SKT CAP OZ	4
**206	050-U00600	M6 NUT NYLOK PAS	3

You can get this game at www.magic-play.eu

You can get this game at www.magic-play.eu

⑳ ASSY GUN RACK R (GST-1540UK) (D-1/1)

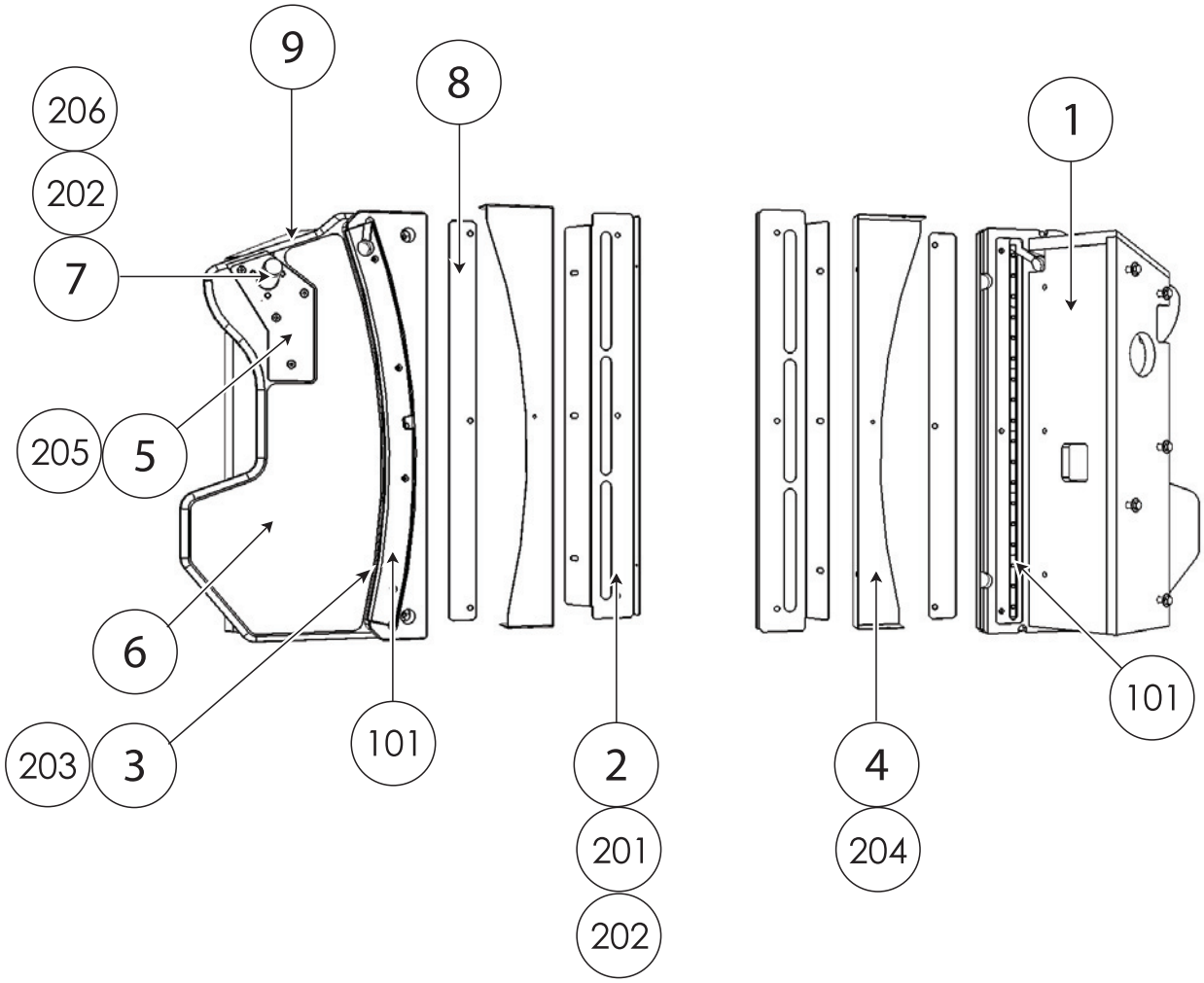

ITEM NO	PART NUMBER	DESCRIPTION	QTY
**1	GST-1541UK	RACK MTG GUN R	1
**2	GST-1532UK	BRKT SUPPORT REAR	1
**3	GST-1533UK	BEZEL LED ARC	1
**4	GST-1544UK	COVER LED BEZEL R	1
**5	GST-1547UK	PLATE HOLDER GUN BUTT L	1
**6	GST-1546UK	DECAL GUN RACK R	1
**7	GST-1538UK	HOOK GUN BUTT	1
**8	GST-1539UK	COVER REVERSE LIGHT	1
**9	GST-1552UK	DECAL TOP GUN RACK R	1
**101	SSR-60022-060UK	WH LED ASSY 600	2
**201	029-B00630-0B	M6X30 SKT BH BLK	5
**202	068-652016-0B	M6 WSHR 20OD FLT BLK	6
**203	000-F00420	M4X20 MSCR CSK PAS	4
**204	000-T00408-0B	M4X8 MSCR TH BLK	4
**205	020-000620-0Z	M6X20 SKT CAP OZ	4
**206	050-U00600	M6 NUT NYLOK PAS	3

You can get this game at www.magic-play.eu

You can get this game at www.magic-play.eu

㉑ ASSY CONTROL PANEL (GST-2000UK) (D-1/1)

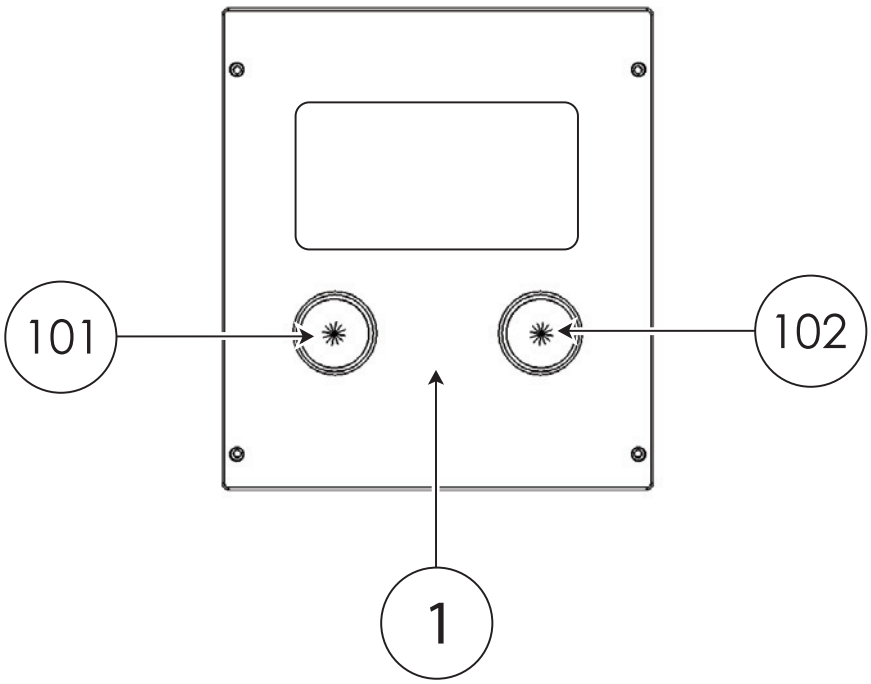

ITEM NO	PART NUMBER	DESCRIPTION	QTY
***1	GST-2001UK	PLATE CONTROL PANEL	1
***101	509-0001-BL	BUTTON 12V 1.2W BLU S'POINT CPBL	1
***102	509-0001-RE	BUTTON 12V 1.2W RE S'POINT CPBL	1
***301	GST-60023UK	WH BUTTON	1

You can get this game at www.magic-play.eu

You can get this game at www.magic-play.eu

㉒ ASSY CONTROLLER (GST-2100) (D-1/2)

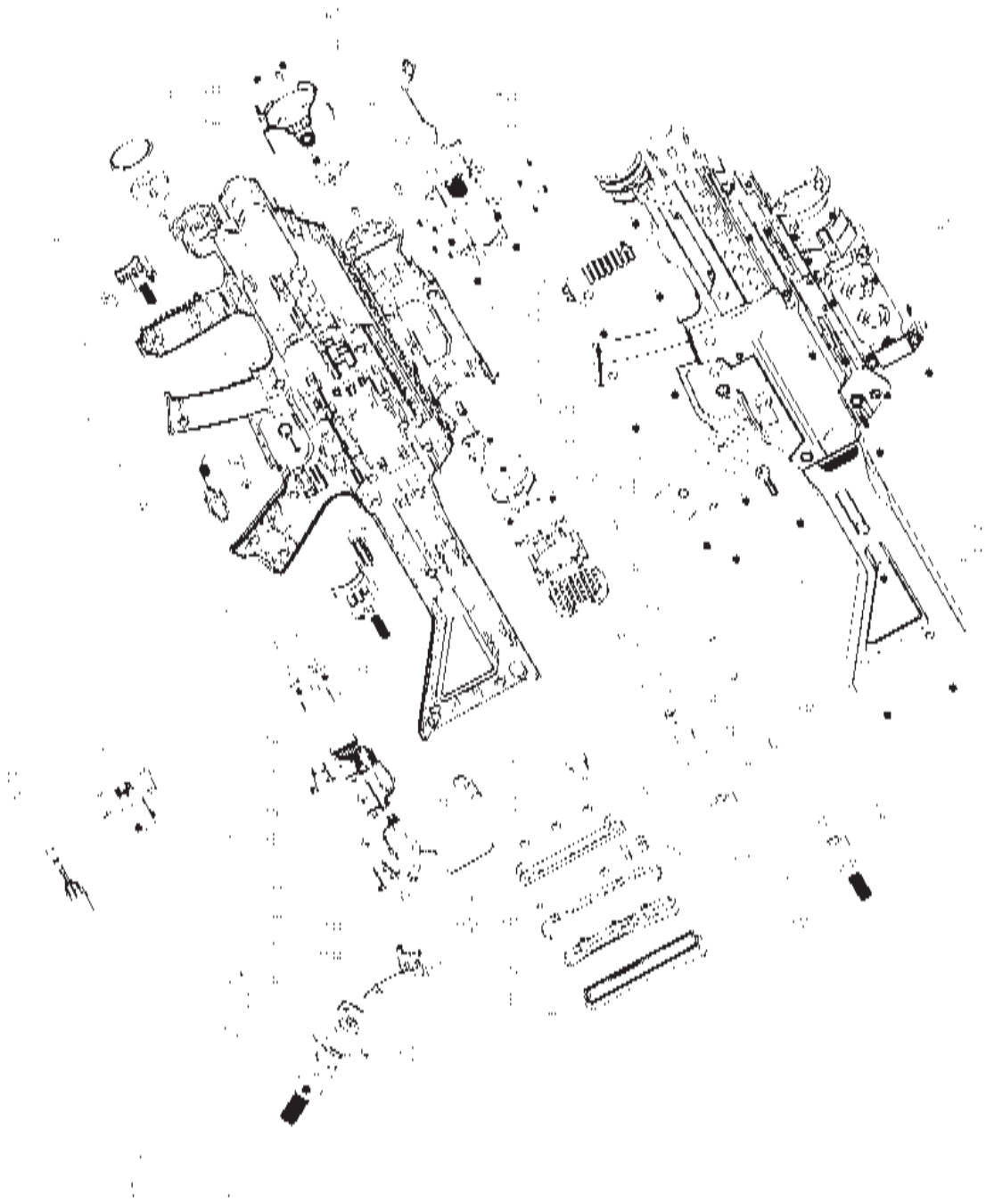

You can get this game at www.magic-play.eu

You can get this game at www.magic-play.eu

㉒ ASSY CONTROLLER (GST-2100) (D-2/2)

ITEM NO	PART NUMBER	DESCRIPTION	QTY
1	GLG-2130X	SENSOR UNIT	1
2	GST-2101	COVER L	1
3	GST-2102	COVER R	1
4	GST-2104	MAIN TRIGGER	1
5	GST-2105	SUB TRIGGER	1
6	GST-2106	SELECTOR	2
7	CTF-2107	SELECTOR HOLDER	2
8	CTF-2108	SELECTOR JOINT	1
9	CTF-2009	PAD BASE	1
10	CTF-2110	BEARING HOLDER	2
11	CTF-2111	PAD	1
12	CTF-2112	SOLENIOD FRAME	1
13	CTF-2113	SHAFT JOINT	1
14	CTF-2114	PAD FRAME	1
15	CTF-2115	RECOIL DAMPER	1
16	CTF-2116	SOLENOID DAMPER	1
17	CTF-2117	SHAFT DAMPER F	1
18	CTF-2118	SHAFT DAMPER R	1
19	CTF-2119	CAP BASE	1
20	CTF-2120	LIGHT CAP	1
21	CTF-2121	PAD BEZEL	1
22	CTF-2122	PAD PIN	1
23	CTF-2123	TRIGGER SPRING	2
24	CTF-2124	SELECTOR SPRING	1
25	CTF-2125	SHAFT	1
26	CTF-2126	JOINT PIN	1
27	CTF-2127	SHAFT STOPPER	1
28	CTF-2128	DAMPER BASE	1
29	CTF-2129	RETURN SPRING	1
30	CTF-2130	SCOPE BODY L	1
31	CTF-2131	SCOPE BODY R	1
32	CTF-2132	LENS CAP	1
33	CTF-2133	SPEAKER NET	1
34	CTF-2134	BAFFLE	1
35	CTF-2135	BRKT LENS CAP	1
36	CTF-2136	BRKT BAFFLE	2
101	130-5288	SPEAKER 8OHM 5.5W	1
102	124-5113	SOLENOID DC24V THERMOSTAT	1
103	509-5080	SW MICRO TYPE (SS-5GL2)	2
104	280-5124-03	NYLON CLAMP NK03	1
105	280-5124-04	NYLON CLAMP NK04	1
106	280-5124-05	NYLON CLAMP NK05	2
107	601-0460	PLASTIC TIE BELT 100MM	7
108	310-5029-D20	SUMITUBE F D 20MM	6
201	FAS-000100	M SCR PH W/SMALL FS BLK M3X12	28
202	000-P00306-S	M SCR PH W/S M3X6	12
203	FAS-120029	TAP SCR P-TITE PH 4X8	8
204	FAS-120030	TAP SCR P-TITE PH BLK 4X12	3
205	065-E00400	E-RING 4MM	2
206	FAS-600020	FLT WSHR NORM A M8	1
207	FAS-120062	TAP SCR P-TITE PH 3X10	2
301	GST-60121	WH CONTROLLER W/SPEAKER	1
302	GST-60122	WH CONTROLLER SPEAKER	1
303	GST-60033	WH CONTROLLER SW EXT	1

You can get this game at www.magic-play.eu

You can get this game at www.magic-play.eu

㉓ ASSY MAIN BD (GST-4000UK) (D-1/1)

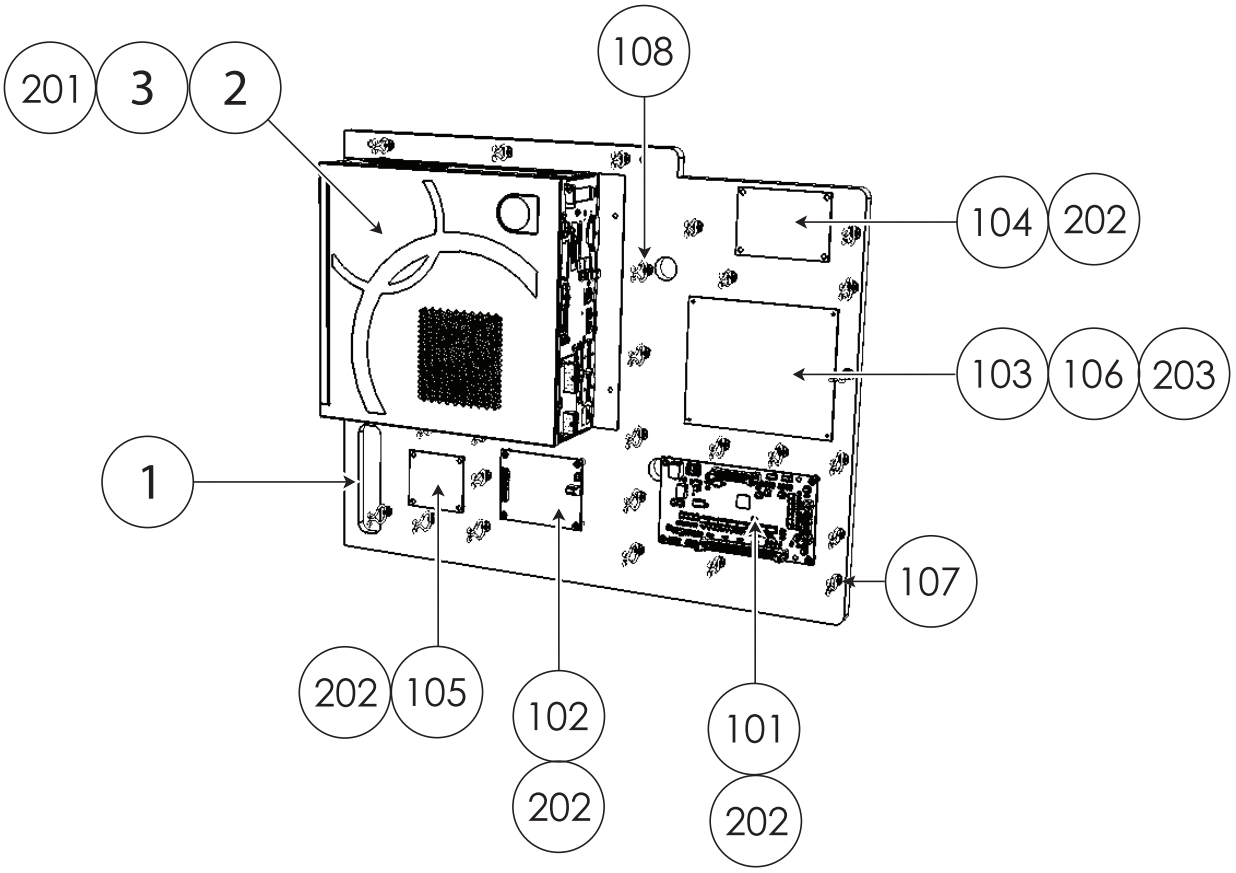

ITEM NO	PART NUMBER	DESCRIPTION	QTY
***1	GST-4001UK	BOARD WOODEN BASE MAIN	1
***2	847-0001D-02	ASSY CASE WDE W 1GB EXP	1
***3	253-5644-028BG	KEY CHIP RGW GST	1
***101	837-14572	I/O CONTROL BD 3 FOR JVS	1
***102	838-14988	2 CH 30W AUDIO AMP ST	1
***103	838-15118-91	IC BD G.SENSE HF	1
***104	839-1243R	FUSE BD CTF	1
***105	839-1383	CLASS D 10W ST AMP	1
***106	OS1011	PCB FEET	4
***107	280-A01264-WX	ROUTER TWIST D12 BHKL-450-4-01	12
***108	280-A02064-WX	ROUTER TWIST D20 BHKL-750-4-01	14
***201	000-P00416-W	M4X16 MSCR PAN W/FS PAS	4
***202	012-P00325	N4X1" S/TAP PAN PAS	16
***203	012-P03506-F	N6X1/4" S/TAP FLG PAS	4
***301	GST-60007UK	WH DC IN RWDE	1
***302	GST-60008UK	WH DC OUT RWDE	1
***303	GST-60009UK	WH COMS A LED	1
***304	GST-60010UK	WH LED HOLSTER A	1
***305	GST-60011UK	WH I/O	1
***306	GST-60012UK	WH 12V G SENSE	1
***307	GST-60013UK	WH G SENSE TO MASK A	1
***308	GST-60014UK	WH DC MAIN BD	1
***309	GST-60015UK	WH SPKR MAIN A	1
***310	GST-60016UK	WH GUN FUSE BD	1
***311	600-7141-100UK	CABLE JVS TYPE A-B 100cm	1
***312	600-7159-0400UK	WH 3.5 JACK TO JACK	1
***313	600-7159-0550UK	WH 3.5 JACK TO JACK	1
***314	CTF-60013UK	WH FREQ	1

You can get this game at www.magic-play.eu

You can get this game at www.magic-play.eu

㉔ ASSY ELEC (GST-4100UK) (D-1/1)

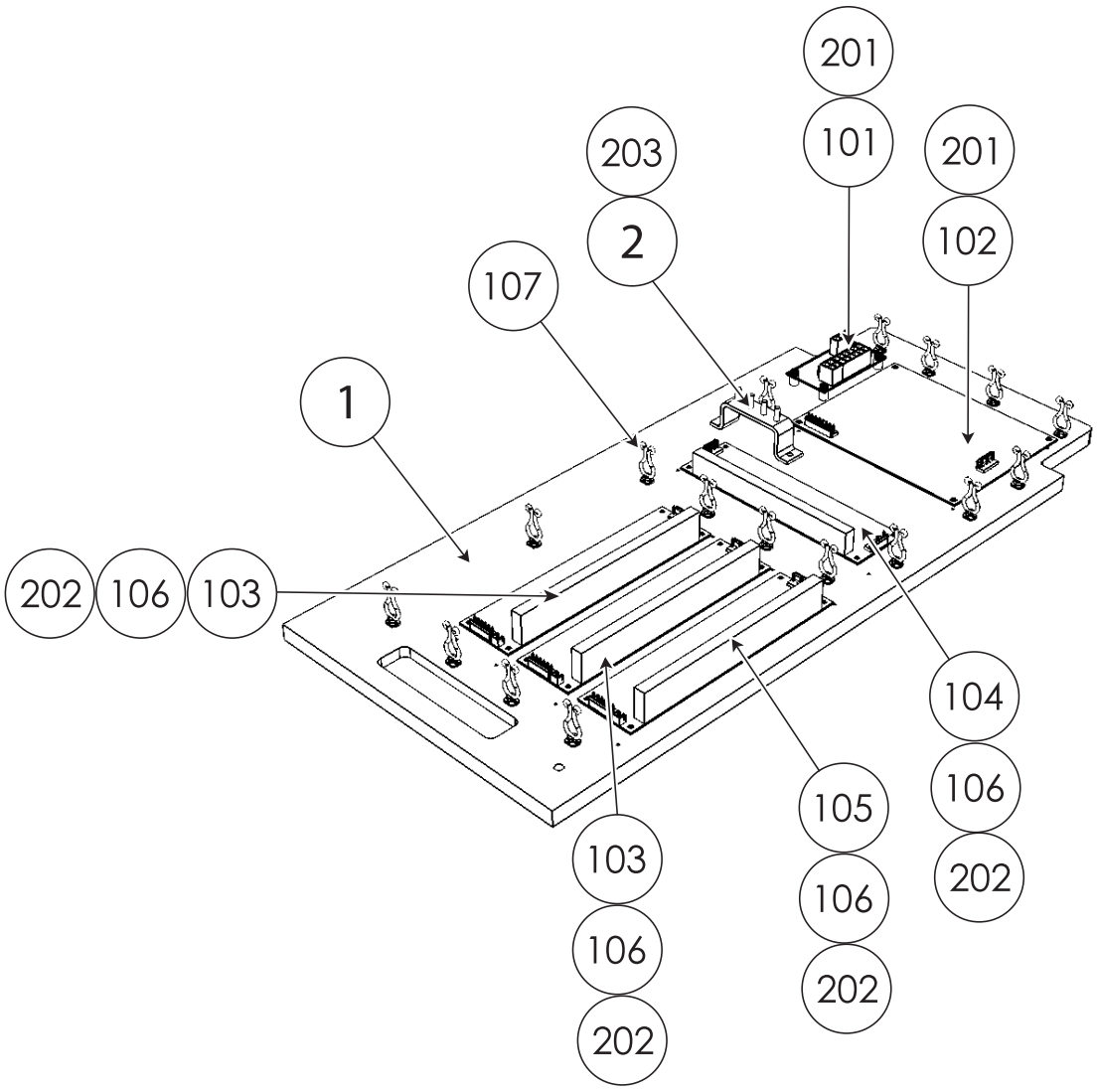

ITEM NO	PART NUMBER	DESCRIPTION	QTY
***1	GST-4101UK	BOARD WOODEN BASE SUB	1
***2	CFB-4003-01UK	EARTH PLATE	1
***101	838-14551-02UK	AC DISTRIBUTION BD	1
***102	400-5483	SW REGU EADP-130CF A DELTA	1
***103	400-075-024-01	PSU 24VDC 75W MW LPS-75-24	2
***104	400-050-012-01	PSU 24VDC 50W MW LPS-50-12	1
***105	400-075-005-01	PSU 24VDC 75W MW LPS-75-05	1
***106	OS1011	PCB FEET	16
***107	280-A01264-WX	ROUTER TWIST D12 BHKL-450-4-01	19
***201	012-P00325	N4X1" S/TAP PAN PAS	8
***202	012-P03506-F	N6X1/4" S/TAP FLG PAS	16
***203	012-P03512-F	N6X1/2" S/TAP FLG PAS	2
***301	GST-60003UK	WH AC DIST OUT A	1
***302	GST-60006UK	WH DC A	1

You can get this game at www.magic-play.eu

You can get this game at www.magic-play.eu

20 WIRE COLOUR CODE TABLE

⚠ WARNING

The DC power wire color for this product is different from previous SEGA titles. Working from the previous wire colors will create a high risk of fire.

The color codes for the wires used in the diagrams in the following chapter are as follows.

A	PINK
B	SKY BLUE
C	BROWN
D	PURPLE
E	LIGHT GREEN

Wires other than those of any of the above 5 single colors will be displayed by 2 alphanumeric characters.

1	RED
2	BLUE
3	YELLOW
4	GREEN
5	WHITE
7	ORANGE
8	BLACK
9	GRAY

If the right-hand side numeral of the code is 0, then the wire will be of a single color shown by the left-hand side numeral (see the above).

Note 1: If the right-hand side numeral is not 0, that particular wire has a spiral color code. The left-hand side character shows the base color and the right-hand side one, the spiral color.

<Example> 51·····WHITE/RED

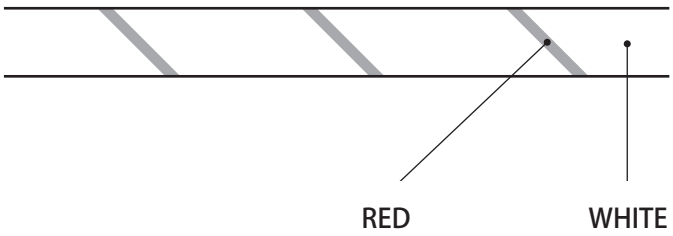

Note 2: The character following the wire color code indicates the size of the wire.

U :	AWG16
K :	AWG18
L :	AWG20
None :	AWG22

You can get this game at www.magic-play.eu

You can get this game at www.magic-play.eu

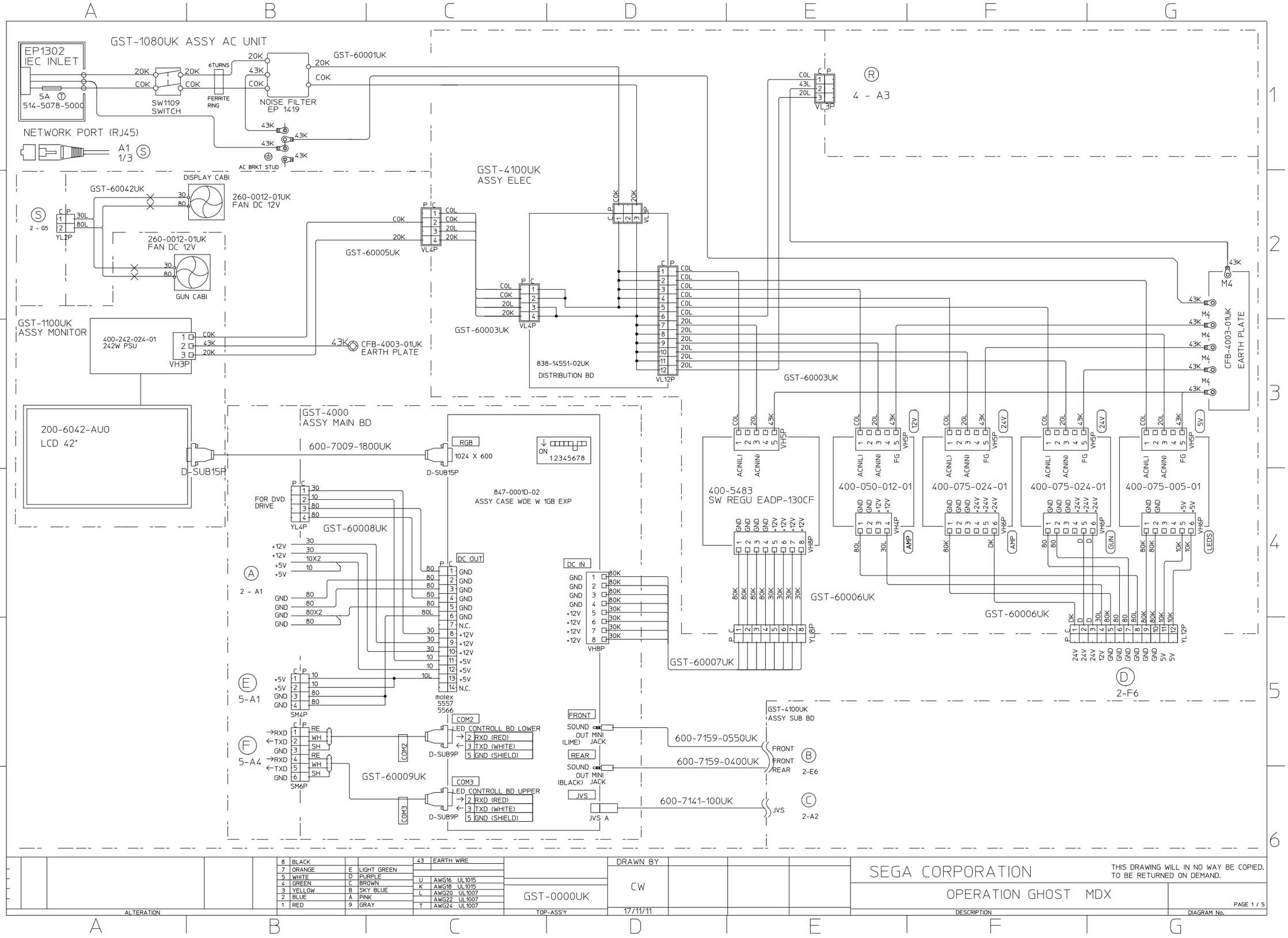

8	BLACK			43	EARTH WIRE	GST-0000UK	DRAWN BY
7	ORANGE	E	LIGHT GREEN				CW
5	WHITE	D	PURPLE	U	AWG16 UL1015		
4	GREEN	C	BROWN	K	AWG18 UL1015		
3	YELLOW	B	SKY BLUE	L	AWG20 UL1007		
2	BLUE	A	PINK		AWG22 UL1007		
1	RED	9	GRAY	T	AWG24 UL1007		

ALTERATION | TOP-ASS'Y | 17/11/11

SEGA CORPORATION

THIS DRAWING WILL IN NO WAY BE COPIED. TO BE RETURNED ON DEMAND.

OPERATION GHOST MDX

DESCRIPTION | DIAGRAM No. | PAGE 1 / 5

You can get this game at www.magic-play.eu

You can get this game at www.magic-play.eu

(D-2/3)

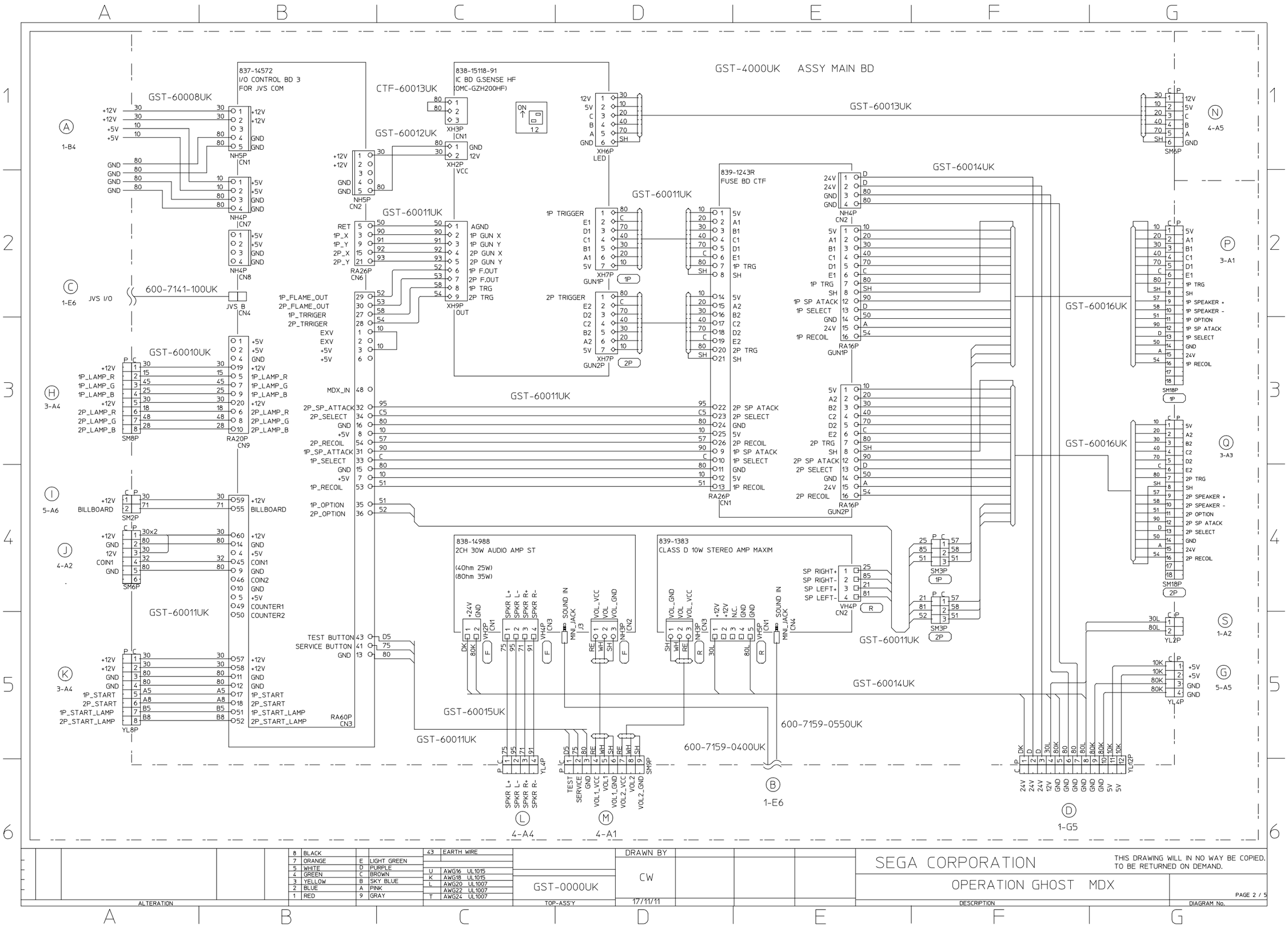

You can get this game at www.magic-play.eu

You can get this game at www.magic-play.eu

(D-3/3)

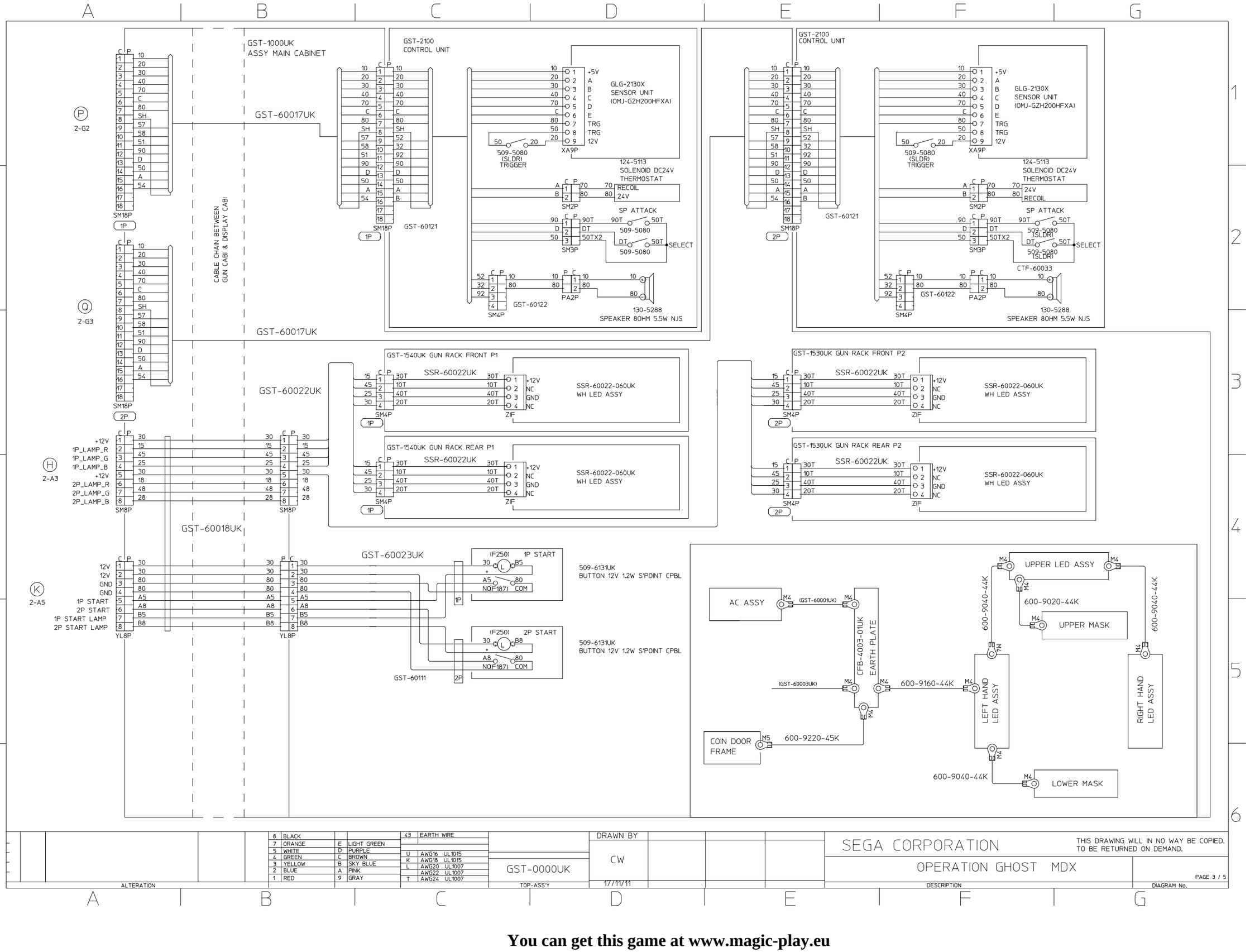

8 BLACK			43 EARTH WIRE	DRAWN BY	SEGA CORPORATION
7 ORANGE	E LIGHT GREEN				THIS DRAWING WILL IN NO WAY BE COPIED. TO BE RETURNED ON DEMAND.
5 WHITE	D PURPLE				
4 GREEN	C BROWN	U AWG16 UL1015			
3 YELLOW	B SKY BLUE	K AWG18 UL1015	GST-0000UK	CW	OPERATION GHOST MDX
2 BLUE	A PINK	L AWG20 UL1007			
1 RED	9 GRAY	AWG22 UL1007			PAGE 3 / 5
		T AWG24 UL1007			
ALTERATION			TOP-ASS'Y	17/11/11	DESCRIPTION / DIAGRAM No.

You can get this game at www.magic-play.eu

You can get this game at www.magic-play.eu

GST-1000
ASSY FRONT CABINET

GST-1090UK ASSY SW UNIT

838-14548-01AUK
SW & VOL CTL BD

GST-60024UK

GST-60020UK

GST-60024UK

GST-60020UK

CABLE CHAIN BETWEEN
GUN CABI & DISPLAY CABI

GUN VOLUME 5K POT

COIN INSERT LAMP

EP1380-01
ELEC COIN BD EXCEL

molex
5239-14P

SW1
ON 12345

SW3
ON 123456

COIN MECH

RA10P
(CN3)

RA10P

DBA POWER

12V COIN METER

220-5643UK

DISPLAY CABINET - FRONT VIEW

GST-60026UK

GST-1090
ASSY SPEAKER

130-04030-E
4 Ohm 40W

SRS-60020UK

GST-1140UK
ASSY UPPER MONITOR MASK
GST-1150UK
ASSY LOWER MONITOR MASK

GST-60027UK

838-15119
LED BD HFN G.SENSE GLG

GST-60030UK

GST-60029UK

8	BLACK	E	LIGHT GREEN
7	ORANGE	D	PURPLE
5	WHITE	C	BROWN
4	GREEN	B	SKY BLUE
3	YELLOW	A	PINK
2	BLUE	9	GRAY
1	RED		

43	EARTH WIRE
U	AWG16 UL1015
K	AWG18 UL1015
L	AWG20 UL1007
	AWG22 UL1007
T	AWG24 UL1007

GST-0000UK
TOP-ASS'Y

DRAWN BY
CW
17/11/11

SEGA CORPORATION

THIS DRAWING WILL IN NO WAY BE COPIED.
TO BE RETURNED ON DEMAND.

OPERATION GHOST MDX

PAGE 4 / 5

ALTERATION | DESCRIPTION | DIAGRAM No.

You can get this game at www.magic-play.eu

You can get this game at www.magic-play.eu

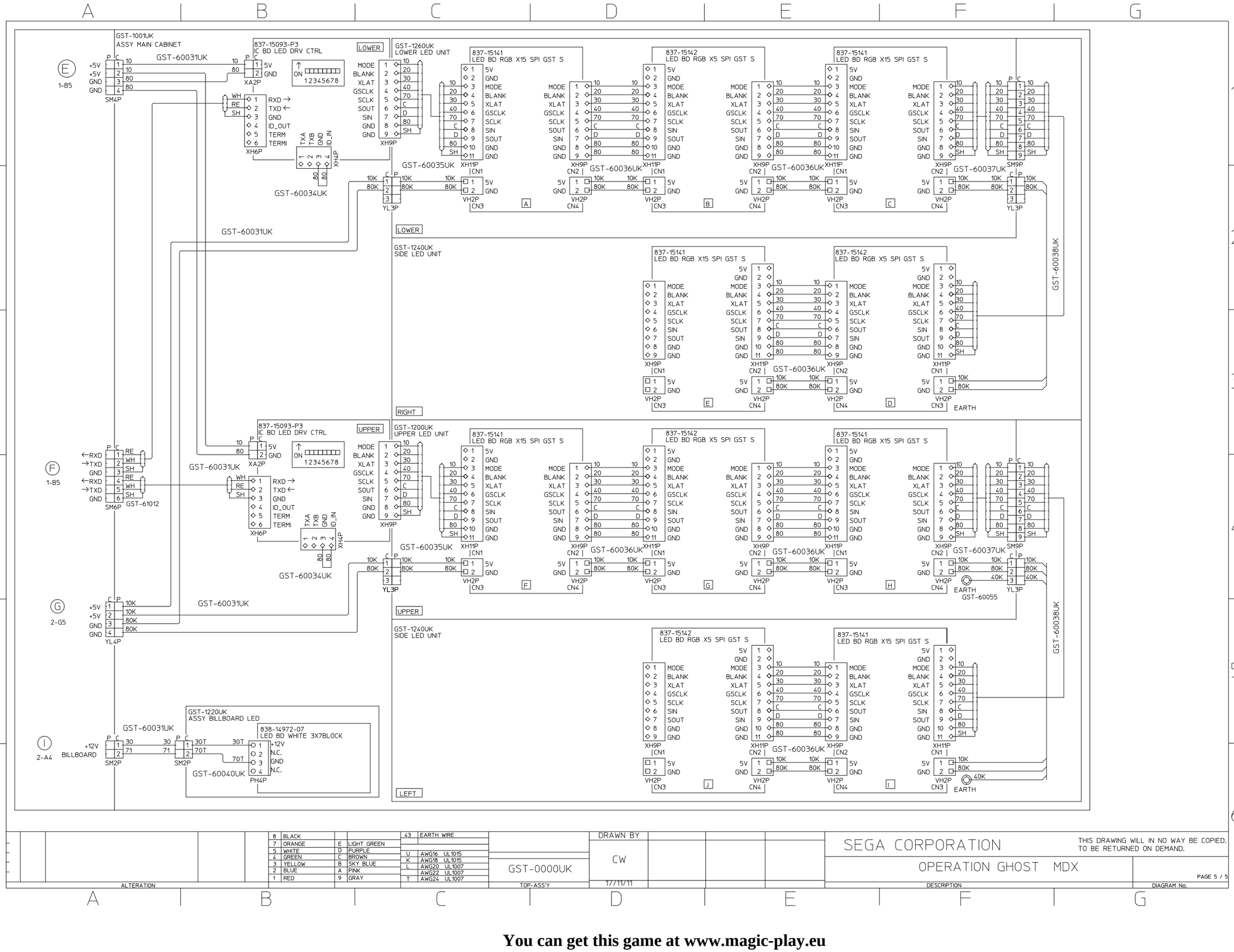

8	BLACK			43	EARTH WIRE	DRAWN BY	SEGA CORPORATION
7	ORANGE	E	LIGHT GREEN				THIS DRAWING WILL IN NO WAY BE COPIED. TO BE RETURNED ON DEMAND.
5	WHITE	D	PURPLE	U	AWG16 UL1015	CW	OPERATION GHOST MDX
4	GREEN	C	BROWN	K	AWG18 UL1015		
3	YELLOW	B	SKY BLUE	L	AWG20 UL1007	GST-0000UK	
2	BLUE	A	PINK		AWG22 UL1007		
1	RED	9	GRAY	T	AWG24 UL1007	17/11/11	PAGE 5 / 5
ALTERATION						TOP-ASS'Y	DESCRIPTION / DIAGRAM No.

You can get this game at www.magic-play.eu